RURAL TRANSPORTATION ADVOCACY COUNCIL (RTAC)
REGIONAL PROJECT LIST
APPLICATION

GENERAL PROJECT INFORMATION			
SPONSORING AGENCY:		**DATE SUBMITTED:**	06/09/2021
CONTACT NAME:	Todd Pryor/ Lana Clark	**TITLE:**	Town Manager/ Engineering
EMAIL ADDRESS:	sclark@superioraz.gov	**PHONE #:**	5206895752

☐ **ROADWAY IMPROVEMENT**	Roadway Name:	New Bridge at Panther (Mary) Drive			
	Starting Location:	Panther drive :33.284034,-111.117312			
	Ending Location:	Panther drive :33.283669,-111.117210			
	Length (to the 0.1 of a mile):	0.03			
	# of Lanes (Before & After):	Before:	2	After:	2
☐ **INTERSECTION IMPROVEMENT**	Roadway Name "A":				
	Roadway Name "B":				
☐ **BRIDGE IMPROVEMENT**	☐ Restoration/Operational	Bridge Sufficiency Rating (LINK to ADOT NBI Table)			
	☐ Replacement	Structurally Deficient?	☐ Yes	☐ No	
	☐ Widening	Functionally Obsolete?	☐ Yes	☐ No	
☒ **OTHER**	Description of project type:	Construction of the New Bridge at the intersection of Panther Drive and the Queen Creek			

FEDERAL FUNCTIONAL CLASSIFICATION – (LINK: FEDERAL FUNCTIONAL CLASSIFICATION MAPS):	https://adot.maps.arcgis.com/apps/webappviewer/index.html?id=7910e9ddd68b43f3a5b86aaf19119081

AVERAGE ANNUAL DAILY TRAFFIC (AADT) COUNT: (LINK: AADT COUNTS):			**DATE OF AADT COUNT:**	2016
LEVEL OF SERVICE (LOS):	Current:	1041	After:	More than 2,000

PROJECT NEED

This section should clearly state why CAG TTAC members should consider this project to be one of the highest priorities within the CAG Region for which the use of the requested regional funds is the best option.

PROJECT NEED:

The new Bridge goal is to improve the mobility of people and goods, protect the natural environment, support economic development, and sustain public support for transportation planning and funding efforts.
The town population is projected to increase from 2,906 in 2010 to 4,789 by 2040.
Employment is projected to increase from 602 in2010 to 2,447 by 2040. (Resolution Study Report)
The Panther (Mary) Drive is one of the major roads vital to providing economic and safety opportunities to the Town of Superior. The road connects the south townsite with the north area of the Town, also described as a collector road with direct access to US 60 HWY. The Panther Drive has a flooding problem at the intersection with Queen Creek during monsoon seasons and winter rainfalls.
The Superior high school, Fire Department, and Public playground and swimming pool are located on the south side of the Town at Panther Drive. The Ambulance and Police Department is situated on the north side of US60 HWY and is considered the Town's north side.
When the Creek flooded, the Fire trucks, ambulances, and police have to take a ~7 minutes detour to respond to emergencies; calculation taken from the test drive of the ambulance, police, and Fire Truck. ~7 minutes can mean life or death in an emergency such as a fire, medical need, or police matters.
More than half of the Town population that lives on the newer side of the Town takes detours on smaller streets that create delays, conjunction, and safety issues. Moreover, parents whose kids attend the school have to take detours that also delay their schedule during the rush hours, creating traffic backup issues.
Because of the effect of flooding at this crossing on emergency vehicle response times, the town officials ranked it as the flooding issue with the **highest priority**, as Superior has other flooding issues they have to deal with during the rainy seasons.
Panther (Mary) Drive and Sunset Drive are the two major collector streets in the Town of Superior,
see Exhibit "A."

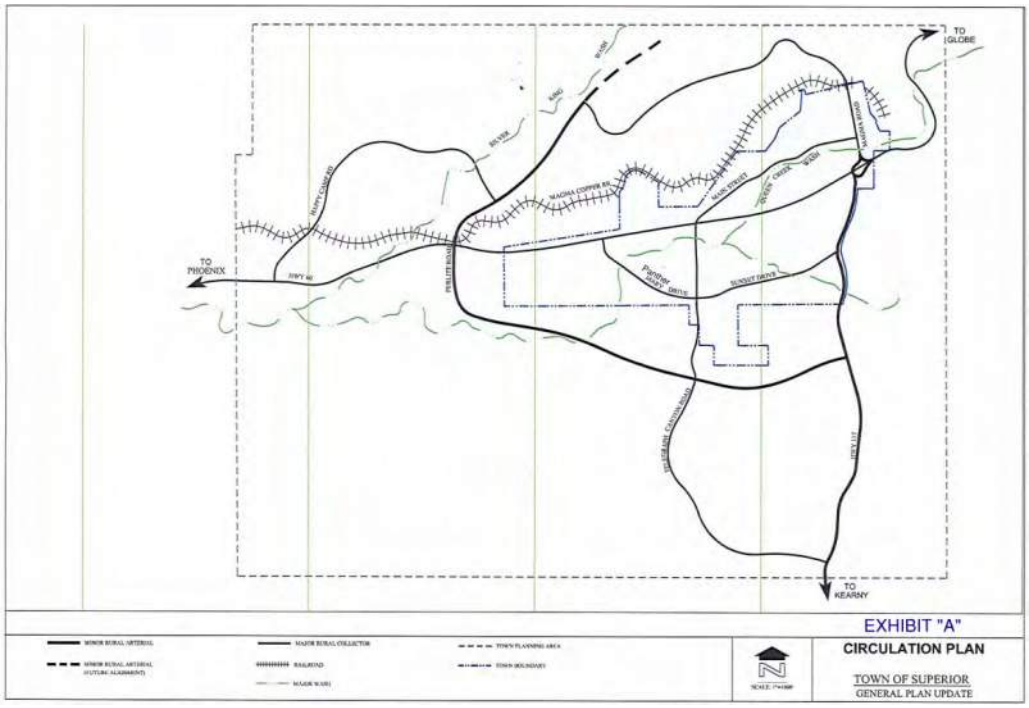

COST ESTIMATE & PROJECT PROGRAMMING

☒ **DESIGN**	**State Budget Surplus Request**:	$ 195,750.0
	Local Match: *(In addition to Surplus Request – NOT REQUIRED.)*	$ 21,750
	Other Non-Local Funding Sources to be Utilized: *(Example: Other Federal Resources, etc.)*	$
	Total Cost Estimate (*Surplus Request + Other + Local Match*):	$217,500.0

	NOTE: For every 5% of Local Matching dollars committed to the project, one (1) additional bonus point will be awarded to the overall score.	
☒ **CONSTRUCTION**	**State Budget Surplus Request**:	$2,122,190.00
	Local Match: *(In addition to Surplus Request – NOT REQUIRED.)*	$ 235,799.00
	Other Non-Local Funding Sources to be Utilized: *(Example: Other Federal Resources, etc.)*	$
	Total Cost Estimate (*Surplus Request + Other + Local Match*):	$2,357,989.00
	NOTE: For every 5% of Local Matching dollars committed to the project, one (1) additional bonus point will be awarded to the overall score.	

- *Although this is not an ADOT funded application, please ATTACH a completed **"ADOT Cost Estimate Tool"** document for your estimate for comparison purposes only. Disregard any ADOT related fees if your proposal is going to be self-administered.*

Any application without the required attachment will not be considered for funding.

PROJECT WORK DESCRIPTION

Provide a brief work description that describes the work to be performed, existing and/or proposed conditions, its benefits, and overall cost estimate. **Please ATTACH a Project Vicinity/Project Location Map.**

PROJECT WORK DESCRIPTION:

Due to seasonal flooding at the intersection of Queen Creek and Panther Drive, The Town of Superior has determined the Bridge construction is a high-priority project to protect the health and safety of citizens. Therefore, it is necessary to design and construct low water crossing Bridge to provide all-weather access and emergency services to all parts of the Town during routine flooding of the crossing and higher-level flooding that occurs with the 10-year flood event.
Design a 10-year low water crossing or 50 to 100 -year return flow. Bridge design at Panther Drive and Queen Creek requires raising the Panther Drive and Channelization of Queen Creek.
The Concrete Bridge shall consist of two 12-foot travel lanes in each direction plus five-foot-wide shoulders and Handrails on both sides of the Bridge.
Shoulders will provide flow protection while providing pedestrian and bicycle access to the crossing.
Install the Pedestrian lighting at the crossing on each side of the Bridge.
Landscape establishment at the disturbed area of the Creek.

TOWN OF SUPERIOR

PINAL COUNTY, ARIZONA

NEW BRIDGE AT CREEK CROSSING

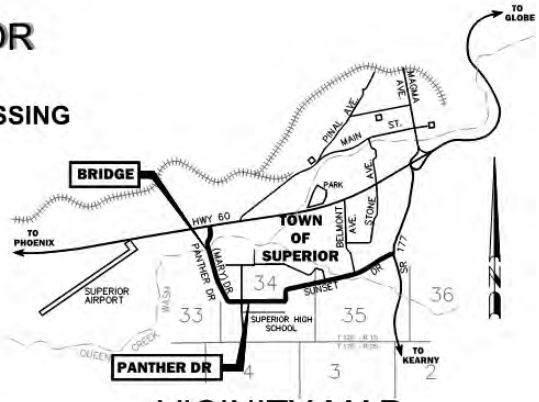

VICINITY MAP

BRIDGE AT CREEK CROSSING:
36 foot wide and 300 feet in length.

LOCATION MAP

ITEMS TO BE ADDRESSED

PROJECT INCLUSION IN PREVIOUS PLANS	Is the project included in previous plans?		☒ YES	☐ NO
	☒	Regional Transportation Plan (RTP)	☐	Pre-Scoping Planning Assistance for Rural Areas (PARA)
	☐	Road Safety Assessment (RSA)	☐	Comprehensive Economic Development Strategy (CEDS)

	☐	Capital Improvement Program (CIP)	☐	Local Comprehensive Plan / General Plan
	☐	Regionally Significant Routes (RSR)	☒	Local Transportation Plan
	☐	Other #1 _____	☐	Other #2 _____

COMMUNITY TRANSPORTATION BENEFITS	Does the project provide multi-modal improvements? **Yes, or No and Why?**	Yes. The Creek will be cleaned from debris and regraded at the bridge area; the road near Bridge will include repave and sdhoulder improvememts.
	Does the project provide Economic Development benefits? **Yes, or No and Why?**	Yes. The community is growing; The safety issues would be resolved. Citizens will gain full-time access to the Panther Drive, including US 60 Hwy.
	Are there any Environmental Justice concerns with the project? **Yes or No and Why?**	No. The New Bridge will not impact the Environmental justice concerns since the Partner Road is already an existing road through the Creek.
	What are the expected Environmental Clearances or impacts of the project?	Will be routine environmental clearance; the Bridge project is within Town right of way. Most likely will be a categorical exclusion.
	Describe the Community Investment impact if the project is selected.	The Town would have to re-route the traffic and prepare detours during the construction period.
SAFETY COUNTERMEASURES	Does the project incorporate one or more of the FHWA safety countermeasures AND/OR addresses a specific location with identified safety deficiencies? **Yes or No and Why?**	Yes. **FHWA-SA-17-069** Local Road Safety Plans Safety deficiencies are: Enforcement Education Emergency medical services Increase of traffic congestion and delays The construction of the Bridge will solve those safety deficiencies during flooded seasons.
	Does the project exhibit a five (5)-year historic fatal and total crash rate above the State average? **Yes or No and Why?**	***It was not determined at the specific road.*** ***Last (5)-year crash data from 2015. 34 incidents occurred in the study area. 3% of crashes were fatal.*** ***Most incidents occurred on the south side of the Town and US60 Hwy. However, there is no information on how many incidents occurred during the flooded seasons.***
	Does the project primarily include any of the 44 safety countermeasures listed on the next page? **Yes or now and Why?**	Yes; shoulder rumble strips will divide the road edge from the shoulder for bicyclist and pedestrian cross. Wide edge lines and wet reflective pavement markings to improve the visibility for drivers, bicyclists, and pedestrians

SAFETY COUNTERMEASURE	Y or N
1. "Stop Ahead" pavement markings	N
2. "Vehicles Entering When Flashing" (VEWF) system (advance post mounted signs on major and loops on minor)	N
3. 12-inch signal heads all faces all directions	N
4. Actuated advance warning dilemma zone protection system	N

5. 3-inch yellow retroreflective sheeting to signal backplates	N
6. Advance street name signs	N
7. All red clearance interval new or existing signals	N
8. All-way stop control (with flashing beacons)	N
9. All-way stop control (without flashing beacons)	N
10. Composite shoulders (5 feet minimum) on rural two lane roads	N
11. 3-lane roadways with center turn lane	N
12. Flashing lights and sound signals at Railroad grade crossings	N
13. Gates with signs at railroad at grade crossings	N
14. Improve 2-lane roadway to 4-lane divided roadway	N
15. Improvements that include reducing 11 feet lanes to 9 feet	N
16. Install shoulder rumble strips	Y
17. Install centerline rumble strips	N
18. Install wide edgelines (6-inch min)	Y
19. Install a traffic signal (engineering study demonstrates meeting MUTCD Warrant 7)	N
20. Install dynamic signal warning flashers	N
21. Install dynamic speed feedback sign at high speed crash curve site with identified speeding problems	N
22. Install Intersection Conflict Warning Systems (ICWS) for 4-lane at 2-lane intersections	N
23. Install ICWS for 2-lane at 2-lane intersections	N
24. Install ICWS with a combination of overhead and advanced post mounted signs (various messages) and flashers	N
25. Install ICWS with overhead signs (various messages) and flashers at the intersection on minor; loop on major	N
26. Install ICWS with post mounted signs (various messages) and flashers in advance of the intersection on major; loop on major	N
27. Modern roundabout where a signalized intersection exists	N
28. Roundabout at a high-speed 3 or 4 leg rural intersection	N
29. Modify zero or negative left-turn lane offset to create positive offset	N
30. New left-turn lanes with positive offset	N
31. Pavement friction (Microsurfacing, Open Graded Friction Course, High Friction Surfacing)	N
32. Pedestrian Hybrid Beacon (PHB or HAWK)	N
33. Position offset left-turn lanes on both major road approaches	N
34. Protected only left-turn signal equipment	N
35. Protected-permissive left-turn signal equipment	N
36. Raised median	N
37. Right-turn lane geometry with increased line of sight	N
38. Rural 2-lane roads with TWLTL (Two-Way Left Turn Lanes)	N
39. Urban 2-lane road with TWLTL	N
40. Safety edge treatment on rural highways	N
41. Single- or multi-lane roundabout at a 2-way stop-controlled intersection	N
42. Single- or multi-lane roundabout at existing signalized intersection	N
43. 2-way stop control at uncontrolled neighborhood intersections	N
44. Wet-reflective pavement markings	Y

OTHER CONSIDERATIONS

ENVIRONMENTAL	Are there any potential environmental impacts or challenges of the project that you can foresee? **Yes or No and Why?** *(e.g. endanger species, cultural assets, hazardous materials sites, 4Fs, Title VI populations, wet lands that would be affected, etc.)*	No. There are no anticipated environmental impacts because the project is within the existing road.
RIGHT-OF-WAY (ROW)	Please describe any ROW items associated with this project. *(e.g. Will ROW be required? How much ROW? Is the State Land Department involved?)*	All construction work contained within the Town Righ-of-Way.
DEVELOPMENT ACTIVITY	Is there any planned or ongoing development activity that could impact the proposed project? If Yes, please explain.	No. There is no planned of ongoing development activity within the project limits.
UTILITIES	Will the project include/require any utility relocation(s) by the project sponsor? If Yes, please explain.	There are no utilities within the project boundaries.
DRAINAGE	Are there any drainage issues and/or proposed improvements associated with this project?	No. The project will result in the same drainage configuration as the existing site conditions.

RANKING CRITERIA

(To be completed by TTAC members after Submittals are due)

CRITERIA	DEFINITIONS	POSSIBLE POINTS	SCORE
Project Inclusion in Previous Plans	The intended purpose is to achieve accountability and implementation while incorporating performance measures of previous plans and studies.	**15**	
	HIGH – (15 pts) = e.g. CEDS, RTP, RSR, RSA MED – (10 pts) = e.g. CIP, Local Transportation Plan, Pre-Scoping PARA LOW – (5 pts) = e.g. Local Comprehensive / General Plan or other similar broad plans NONE – (0pts) = NONE		
Community Transportation Benefits	The intended purpose is to ascertain maximum socioeconomic benefits across all transportation modes catering to all income levels (total of 20 pts possible).		
	(a) ***Multi-modalism***: Project improves accessibility, mobility and connectivity for multiple modes such as pedestrians, bicyclists, transit and freight.	**4**	
	(b) ***Economic Development***: Project provides accessibility and connectivity to/from employment centers and residential areas as zoned/approved in General Plans.	**4**	
	(c) ***Environmental Justice***: Project caters to minorities, disabled and/or low income groups of population.	**4**	
	(d) ***Environmental Clearance***: Based on projects impact level, various methods are employed for impact assessment (FONSI, Inclusionary, EIS, EIA).	**4**	
	(e) ***Community Investment***: New facilities or facility improvements will benefit the area providing for better accessibility and connectivity, stimulating redevelopment investments.	**4**	
Safety	The aim is to significantly reduce traffic crash fatalities, emergency / evacuation routes.	**15**	
	HIGH (15 pts) = Projects which eliminate or drastically reduce an identified safety problem which is causing fatalities, severe injuries or high level of minor injuries and/or property damage. Project addresses either an intersection or a corridor that is on the current list of high crash locations or if the project is identified under the CAG Strategic Transportation Safety Plan. MED (10 pts) = Projects which eliminate or reduce an identified safety problem which is causing a moderate amount of minor injuries and/or property damage. Project addresses security risks for transportation infrastructure on arterial network. LOW (5 pts) = Projects which eliminate or reduce an identified safety problem which is causing some amount of minor injuries and/or property damage or addresses a potential future safety problem. NONE (0 pts) = None		
Level of Service (LOS)	Traffic congestion is a direct consequence of the inability of existing roadways to facilitate mobility and movement of traffic volume and thus resulting in travel delays. LOS is a measure to identify congestion and is calculated as the ratio of roadway volume to capacity.	**10**	
	HIGH (10 pts) = Project significantly improves both mobility and travel time. MED (7 pts) = Project improves mobility or travel time. LOW (3 pts) = Project addresses potential future congestion problems and maintains current levels of congestion. NONE (0 pts) = Project does not address potential future congestion problems.		

RANKING CRITERIA

CRITERIA	DEFINITIONS	POSSIBLE POINTS	SCORE
Other Considerations	Projects that have less hurdles to encounter tend to allow the opportunity for a project to have less complications. Therefore cost estimates would, in comparison, be more accurate and provide the best opportunity for a project to not have to request additional funds. HIGH (10 pts) = No to minimal impacts involving all environmental issues, ROW acquisition, development activity, utility relocations, **AND** drainage issues associated with the project. MED (7 pts) = Minimal environmental impacts, ROW acquisition, development activity, utility relocations, **AND/OR** drainage issues associated with the project LOW (3 pts) = Minimal environmental impacts, ROW acquisition, development activity, utility relocations, **AND/OR** drainage issues associated with the project beyond the typical project similar in context. NONE (0 pts) = Significant impacts involving environmental issues, ROW issues, development activity, utility relocations, and drainage issues that are ALL in need to be addressed and could increase overall projects costs after funding authorization.	**10**	
Performance Measures	The aim is to efficiently use limited transportation funds which provide maximum benefits. HIGH (10 pts) = Projects based on operations improvements which are low cost with higher benefits to cost ratio and most effective (e.g. Left-/Right-turn lanes; Signal Optimization/Synchronization etc.; pavement surface rating between 1 and 3; construction projects which are Regionally Significant). MED (7 pts) = Projects based on maintenance such as bridge/culvert repair which are necessary for the smooth operation of the network, or projects which have a pavement surface rating between 4 and 8. LOW (3 pts) = Projects based on new capacity additions and expanding existing roadways, or projects which have a pavement surface rating between 8 and 10.	**10**	
Type of Roadway	Projects are classified based on Federal Functional Classification hierarchy of roadway system. Principal Arterial (10 pts) = • Provides regional connectivity • Mobility is paramount • Limited access with capability of moving high volumes at high speeds Minor Arterial (7 pts) = • Higher speed and longer trip length than collectors • Serves the highest volume generators • Carries majority of trips entering/leaving the area Collectors (3 pts) = • Distributes traffic to and from arterials • Collects traffic from local streets • Provides neighborhood access	**10**	
Cost Estimate	Does the cost estimate appear to be reasonable based on all provided information for the project?	**5**	
Completeness of Application		**5**	
	MAXIMUM SCORE:	**100**	

Bonus Points:

1. ***For every 5% of Local Matching dollars committed to the project, one (1) additional bonus point will be awarded.***
2. ***For each partner agency involved with the proposal, an additional five (5) points will be awarded.***

Estimated Project Costs

INSTRUCTIONS: List all items necessary to develop and construct your project. The applicant is responsible for verifying all costs and their accuracy. Construction cost overruns will be the responsibility of the sponsoring agency.

Enter values into GREEN CELLS.	The program will automatically calculate the Totals and Federal Share at 94.3%

LOCAL PROJECTS: Please note that the Stage I Costs shown below are to be funded by the sponsoring agency and are not eligible for Federal Reimbursement.

ITEM DESCRIPTION	UNIT	QUAN.	UNIT PRICE	TOTAL	FEDERAL FUNDS @ 94.3%	SPONSOR MATCHING FUNDS @ 5.7%
STAGE 1 – SCOPING (15% Preliminary Design)						
SCOPING COSTS Costs cannot be applied toward the federal participation or local match						
SITE TOPOGRAPHIC SURVEY (2%-5% of constr. cost) ***(Enter $0 in Unit Price column if none required)***	LS	1	$7,250.00	$7,250.00		
SCOPING DOCUMENT (Scoping Letter, Project Assessment or DCR)	LS	1	$12,000.00	$12,000.00		
ENVIRONMENTAL DETERMINATION (Including technical supporting documents)	LS	1	$5,000.00	$5,000.00		
HAZARDOUS MATERIALS ASSESSMENT Including heavy metals & asbestos (If an assessment is necessary, anticipate $1,500. ***Enter $0 in Unit Price column if none required)***	LS	1	$0.00	$0.00		
SUBTOTAL – PROJECT SCOPING COSTS				$ 24,250	$22,868	$1,382
STAGES II, III, IV - DESIGN (30%, 60%, 95%-100% Design)						
DESIGN COSTS Note: The use of federal funds for design is optional and subject to authorization. Design should not go beyond Stage II (30%) without environmental approval.						
PS&E's - Plans, Special Provisions, Cost Estimates & Schedules (10%-20% of construction cost.) (Shall be refunded if project is not constructed)	LS	1	$170,300.00	$170,300.00		
GEOTECHNICAL INVESTIGATION (If a report is necessary, anticipate 5% of construction cost) Includes testing, Geotech Report, Materials & Pavement Design Report) ***Enter $0 in Unit Price column if none required.***	LS	1	$0.00	$0.00		
DRAINAGE REPORT (If a report is necessary, anticipate 5% of construction cost) ***Enter $0 in Unit Price column if none required)***	LS	1	$85,150.00	$85,150.00		
STORM WATER POLLUTION PREVENTION PLAN (Required if there is over 1 acre of total disturbance, 1% of construction cost) ***Enter $0 in Unit Price column if none***	LS	1	$0.00	$0.00		
SUBTOTAL – PROJECT DESIGN COSTS Federal Funds for design are calculated at 94.3% of the total design cost. If requesting less than 94.3% Federal Funds for design, enter new total or 0 in the Federal column.				$ 255,450	$240,889	$14,561
STAGE V – CONSTRUCTION						

ITEM DESCRIPTION	UNIT	QUAN.	UNIT PRICE	TOTAL	FEDERAL FUNDS @ 94.3%	SPONSOR MATCHING FUNDS @ 5.7%
SITE ACQUISITION & HARDSCAPE CONSTRUCTION						
RIGHT-OF-WAY ACQUISITION (if necessary)	LS	1		$0.00	$0.00	$0.00
INSTALLATION OF STORMWATER POLLUTION PREVENTION MEASURES (If over 1 acre of disturbance, 5% of constr. costs) ***Enter $0 in Unit Price column if area of disturbance is less than one acre.***	LS	1		$0.00	$0.00	$0.00
SITE PREPARATION (Clearing and grubbing, plant salvage)	LS	1	$0.00	$0.00	$0.00	$0.00
DEMOLITION						
Sawcut	LF	60	$25.00	$1,500.00	$1,414.50	$85.50
Remove Structures and Obstructions	LS	1		$0.00	$0.00	$0.00
Remove Fencing	LF			$0.00	$0.00	$0.00
Remove Structural Concrete	CY	41	$68.00	$2,754.00	$2,597.02	$156.98
Remove Asphaltic Concrete Pavement				$0.00	$0.00	$0.00
Remove Concrete Sidewalks, Slabs				$0.00	$0.00	$0.00
HAZARDOUS MATERIALS ABATEMENT (If applicable; include heavy metals & asbestos; 5% of construction cost) ***Enter $0 in Unit Price column if none required.***	LS	1		$0.00	$0.00	$0.00
UTILITY RELOCATION (If necessary) Only the cost of utilities needing relocation as a direct result of the enhancement project are eligible for federal reimbursement. Because of the costs involved, the undergrounding of overhead utilities is not eligible	LS	1		$0.00	$0.00	$0.00
RETAINING WALL (Concrete; SF of face above the footing)	SFF	300	$110.00	$33,000.00	$31,119.00	$1,881.00
EARTHWORK						
General Excavation	CY	160	$90.00	$14,400.00	$13,579.20	$820.80
Drainage Excavation		45	$90.00	$4,050.00	$3,819.15	$230.85
Structural Excavation		25	$90.00	$2,250.00	$2,121.75	$128.25
Structural Backfill		25	$90.00	$2,250.00	$2,121.75	$128.25
Borrow (In Place)				$0.00	$0.00	$0.00
CURB & GUTTER	LF			$0.00	$0.00	$0.00
AGGREGATE BASE	CY	15	$70.00	$1,050.00	$990.15	$59.85
PATHWAY OR SIDEWALK MATERIALS						
Concrete	SF			$0.00	$0.00	$0.00
Colored Concrete				$0.00	$0.00	$0.00
Stamped Color Concrete				$0.00	$0.00	$0.00
Precast Concrete Pavers				$0.00	$0.00	$0.00
Asphaltic Concrete	Ton			$0.00	$0.00	$0.00
Polymer or Resin Stabilized Surface	SF			$0.00	$0.00	$0.00
CROSSWALK ENHANCEMENT						
Concrete Pavers	SF			$0.00	$0.00	$0.00
Stamped Asphalt				$0.00	$0.00	$0.00
Stamped Concrete				$0.00	$0.00	$0.00
Concrete				$0.00	$0.00	$0.00
Integral Color Concrete				$0.00	$0.00	$0.00
PEDESTRIAN ADA RAMP	SF			$0.00	$0.00	$0.00

ITEM DESCRIPTION	UNIT	QUAN.	UNIT PRICE	TOTAL	FEDERAL FUNDS @ 94.3%	SPONSOR MATCHING FUNDS @ 5.7%
CULVERT EXTENSIONS	LF			$0.00	$0.00	$0.00
PEDESTRIAN LIGHTING (Includes conduit and trenching) Street lighting is not eligible for federal reimbursement.	Each			$0.00	$0.00	$0.00
HANDRAIL						
Standard	LF	600	$150.00	$90,000.00	$84,870.00	$5,130.00
Decorative				$0.00	$0.00	$0.00
SUBTOTAL - SITE ACQUISITION & HARDSCAPE CONSTRUCTION				$ 151,254	$142,633	$8,621
LANDSCAPING & IRRIGATION ITEMS						
TREES (Above 15 gallon in size as required per local code or special design requirements)	Each			$0.00	$0.00	$0.00
TREES (15 GALLON SIZE)	Each			$0.00	$0.00	$0.00
TREES (5 GALLON SIZE)	Each			$0.00	$0.00	$0.00
SHRUBS (5 GALLON SIZE)	Each			$0.00	$0.00	$0.00
SHRUBS (1 GALLON SIZE)	Each			$0.00	$0.00	$0.00
CACTUS (5 GALLON SIZE)	Each			$0.00	$0.00	$0.00
MULCH						
Decomposed Granite	CY			$0.00	$0.00	$0.00
Organic				$0.00	$0.00	$0.00
TOPSOIL	CY			$0.00	$0.00	$0.00
SEEDING	Acre			$0.00	$0.00	$0.00
TURF SOD	SY			$0.00	$0.00	$0.00
BOULDERS	Each			$0.00	$0.00	$0.00
IRRIGATION SYSTEM						
Drip	SF			$0.00	$0.00	$0.00
Turf				$0.00	$0.00	$0.00
SLEEVING FOR IRRIGATION SYSTEM						
Directional Bore	LF			$0.00	$0.00	$0.00
Cut and Patch				$0.00	$0.00	$0.00
LANDSCAPE HEADER CURB	LF			$0.00	$0.00	$0.00
LANDSCAPE ESTABLISHMENT (Typically 4.5% of the cost of landscaping)	LS			$0.00	$0.00	$0.00
SUBTOTAL – LANDSCAPING & IRRIGATION ITEMS				$ -	$0	$0
SITE FURNISHINGS						
BENCHES	Each			$0.00	$0.00	$0.00
SEATWALLS	LF			$0.00	$0.00	$0.00
BIKE RACKS	Each			$0.00	$0.00	$0.00
TRASH RECEPTACLES	Each			$0.00	$0.00	$0.00
DRINKING FOUNTAINS	Each			$0.00	$0.00	$0.00
SIGNAGE (Standard Traffic Control)	Each			$0.00	$0.00	$0.00
TREE GRATES	Each			$0.00	$0.00	$0.00
SUBTOTAL – SITE FURNISHINGS				$ -	$0	$0

ITEM DESCRIPTION	UNIT	QUAN.	UNIT PRICE	TOTAL	FEDERAL FUNDS @ 94.3%	SPONSOR MATCHING FUNDS @ 5.7%
OTHER CONSTRUCTION ITEMS (List line items)						
Conduit pipe 2" Dia	LF	400	$30.00	$12,000.00	$11,316.00	$684.00
Variable Message Sign	LBS	2	$400.00	$800.00	$754.40	$45.60
Conc Surface finishes	SY	80	$60.00	$4,800.00	$4,526.40	$273.60
Paitning Steel	LBS	4,500	$0.30	$1,350.00	$1,273.05	$76.95
St. Reinf Bar	LBS	2,900	$32.00	$92,800.00	$87,510.40	$5,289.60
ANCHOR SLAB (TYPE 1)	SF	11,400	$45.00	$513,000.00	$483,759.00	$29,241.00
DECK JOINT ASSEMBLY (2X2 COMPRESSION SEAL)	LF	99	$285.00	$28,215.00	$26,606.75	$1,608.26
Reinforced Concrete Box Culverts Double Barrel (15' - 30' Fills)	EACH	1	$500,000.00	$500,000.00	$471,500.00	$28,500.00
Pipe Culvert Headwalls 30° Skew Inlet 4:1 Slope	EACH	1	$150,000.00	$150,000.00	$141,450.00	$8,550.00
Pipe Culvert Headwalls 30° Skew Outlet 4:1 Slope	EACH	1	$150,000.00	$150,000.00	$141,450.00	$8,550.00
Pipe Culvert Headwalls Outlet Apron Steel List 4:1 Slope	EACH	1	$100,000.00	$100,000.00	$94,300.00	$5,700.00
				$0.00	$0.00	$0.00
				$0.00	$0.00	$0.00
				$0.00	$0.00	$0.00
				$0.00	$0.00	$0.00
SUBTOTAL - OTHER CONSTRUCTION LINE ITEMS				$1,552,965	$1,464,446	$88,519
MOBILIZATION AND ADMINISTRATION COSTS						
CONTRACTOR MOBILIZATION (Typically 8% of construction cost)	LS	1	$136,320.00	$136,320.00	$128,549.76	$7,770.24
TRAFFIC CONTROL (0-8% of construction cost)	LS	1	$85,150.00	$85,150.00	$80,296.45	$4,853.55
CONSTRUCTION SURVEY & LAYOUT (Typically 1% of construction cost)	LS	1	$17,000.00	$17,000.00	$16,031.00	$969.00
CONSTRUCTION CONTINGENCIES (Typically 5% of construction cost)	LS	1	$85,150.00	$85,150.00	$80,296.45	$4,853.55
CONSTRUCTION ADMINISTRATION (Averaging 18% of construction cost)	LS	1	$306,540.00	$306,540.00	$289,067.22	$17,472.78
SUBTOTAL – MOBILIZATION & ADMINISTRATION COSTS				$ 630,160	$594,240.88	$35,919.12
TOTAL STAGE V COSTS (CONSTRUCTION) (Enter this amount in Box A below.)				$2,334,379	$2,201,319.40	$133,059.60
ADOT REVIEW FEES (Cannot be applied to the federal participation or the local match. On local Certification Acceptance or Self-administration projects, change to $3,000)	LS	1	$30,000.00	$30,000.00	NO ENTRY	
TOTAL PROJECT COST (All subtotals + ADOT review fee)				$2,644,079	NO ENTRY	

SUMMARY OF FEDERAL AND LOCAL FUNDS

TOTAL STAGE V COSTS (CONSTRUCTION) FROM THE ESTIMATE ABOVE, AND DESIGN COSTS IF REQUESTING FEDERAL FUNDS FOR DESIGN. Include design costs (Stages II thru IV) if federal funds are requested for design as shown under Design Costs in the federal column above.	BOX A	$ 2,589,829
TOTAL FEDERAL FUNDS CAPPED @ 94.3% (.943 x amount shown in Box A above). Note: For local projects, the maximum federal funds that can be requested is $500,000 ($1,000,000 for state projects).	BOX B	$ 2,442,209

ITEM DESCRIPTION	UNIT	QUAN.	UNIT PRICE	TOTAL	FEDERAL FUNDS @ 94.3%	SPONSOR MATCHING FUNDS @ 5.7%
TOTAL SPONSOR MATCHING FUNDS (.057 x cost shown in Box A above). Note: The maximum amount that should be shown on this line is $30,223 for local projects ($60,445 for state projects).					BOX C	$ 147,620
TOTAL SPONSOR ADDITIONAL FUNDS (OVERMATCH). Enter the amount in Box A in excess, if any, of $530,223 for local projects or $1,060,445 for state projects.					BOX D	$ 0
TOTAL SPONSOR FUNDS (Sum of Box C and Box D).					BOX E	$ 147,620

Photos of flooded Panther Drive at the Queen Creek

Queen Creek Crossing at Panther Drive

Photo taken on 3/13/2020, 6 days after the Rainstorm

Queen Creek Crossing at Panther Drive

Photo taken on 3/13/2020, 6 days after the Rainstorm

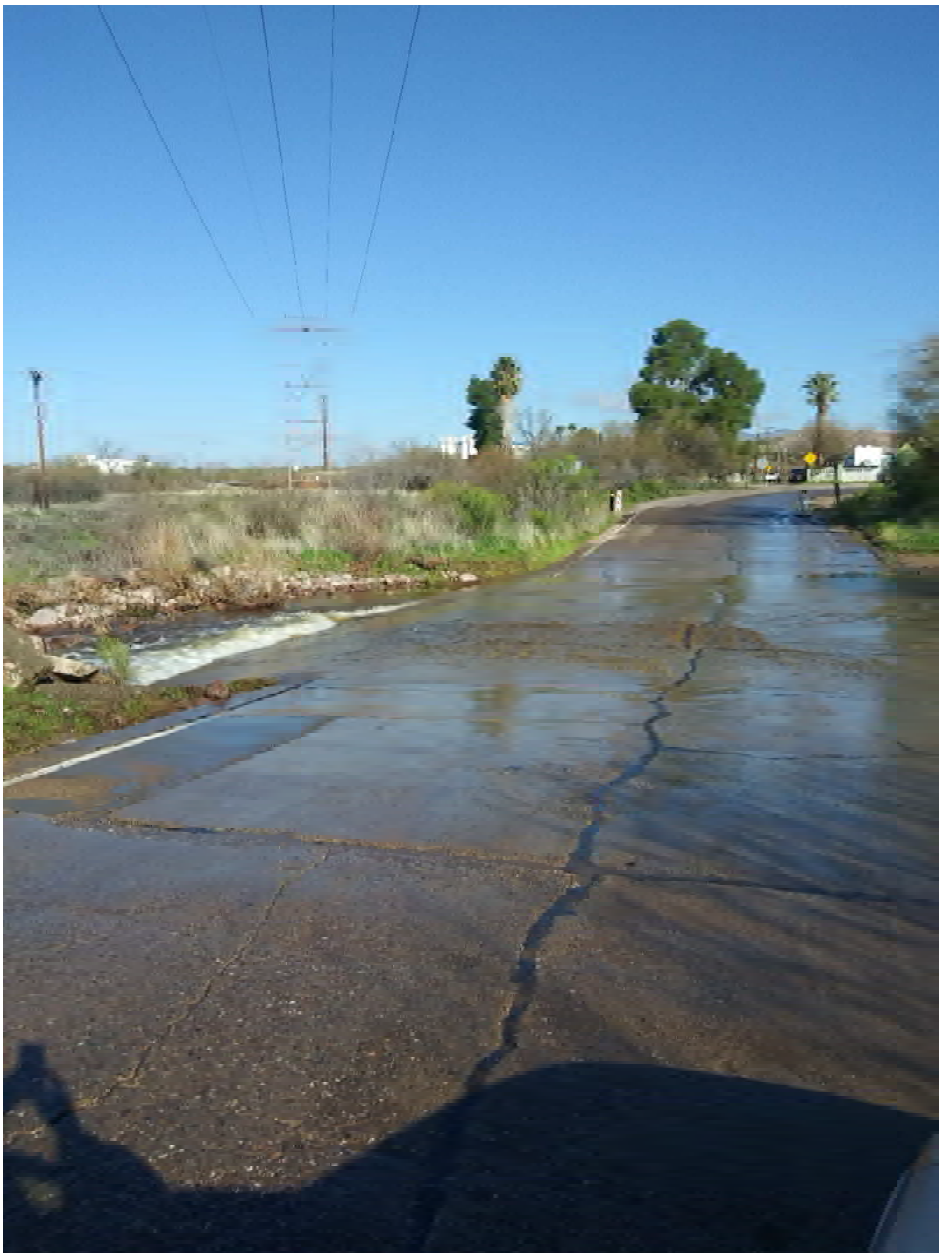

Queen Creek Crossing at Panther Drive

Photo taken on 3/18/2020

screen-shot from videos Provided by residents of Superior- 2019

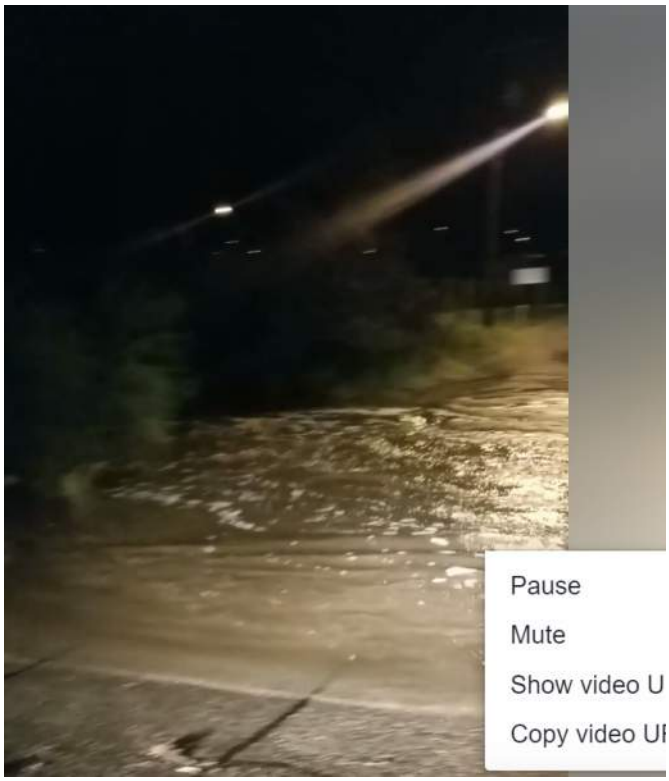

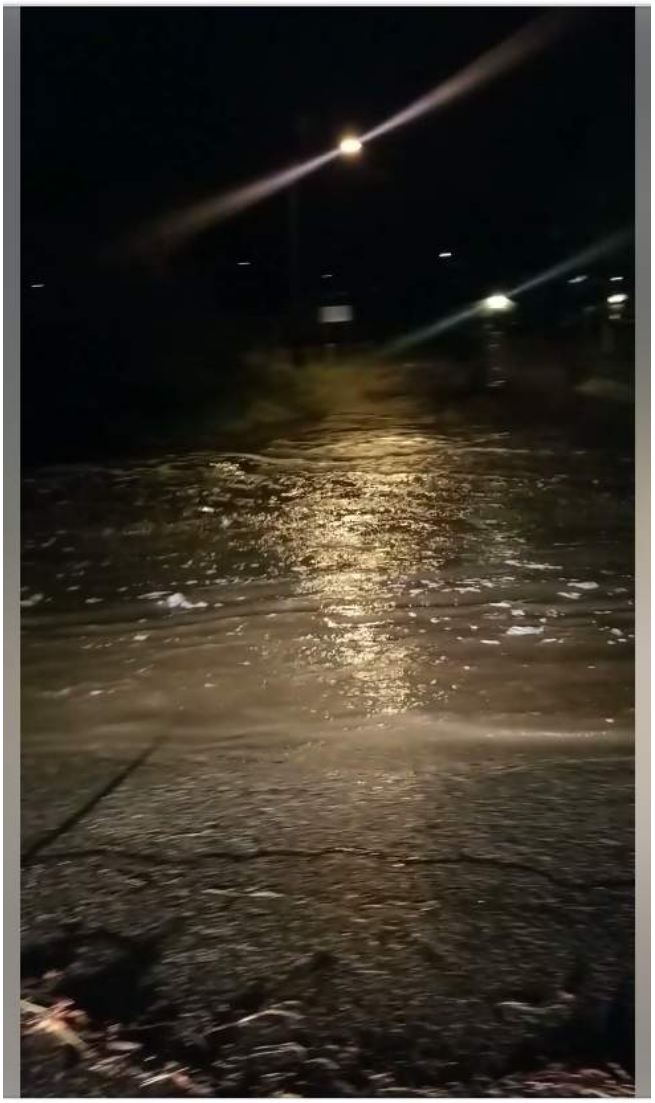

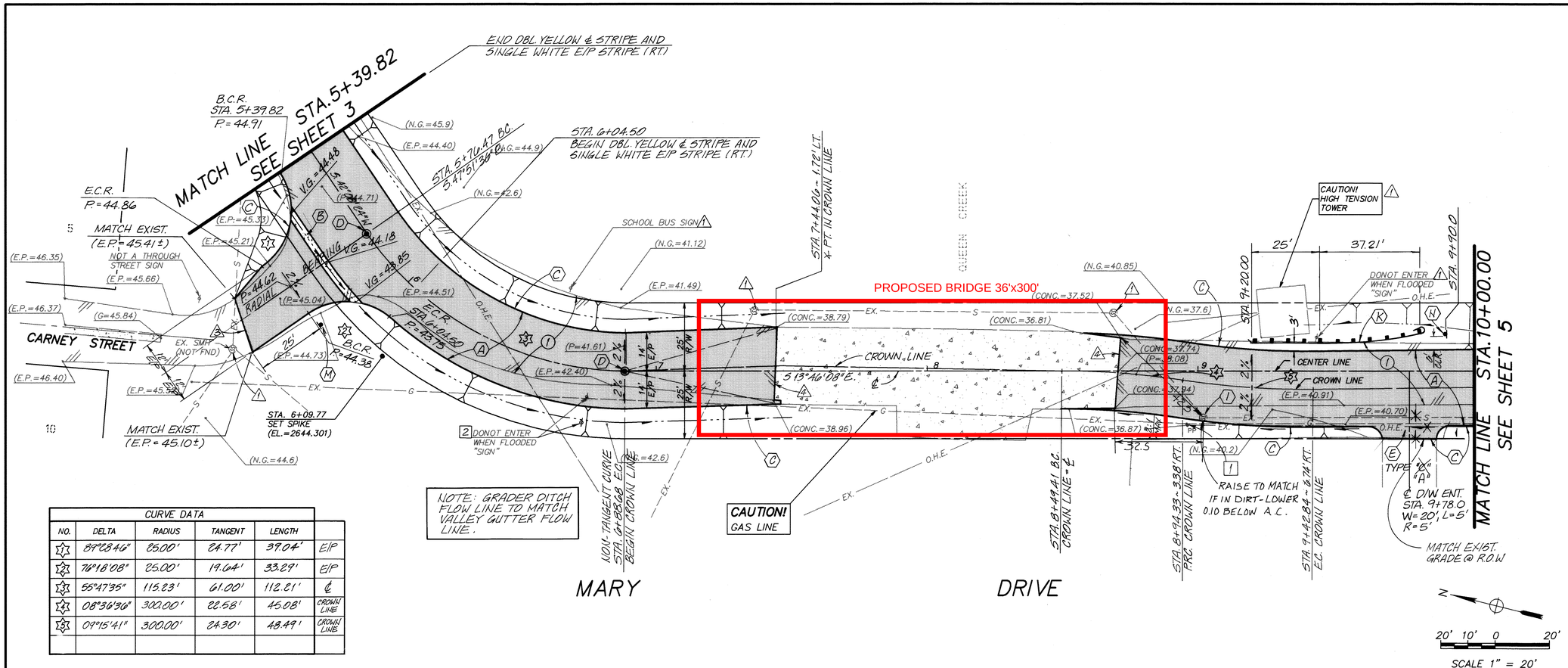

CURVE DATA					
NO.	DELTA	RADIUS	TANGENT	LENGTH	
1	89°28'46"	25.00'	24.77'	39.04'	E/P
2	76°18'08"	25.00'	19.64'	33.29'	E/P
3	55°47'35"	115.23'	61.00'	112.21'	℄
4	08°36'36"	300.00'	22.58'	45.08'	CROWN LINE
5	09°15'41"	300.00'	24.30'	48.49'	CROWN LINE

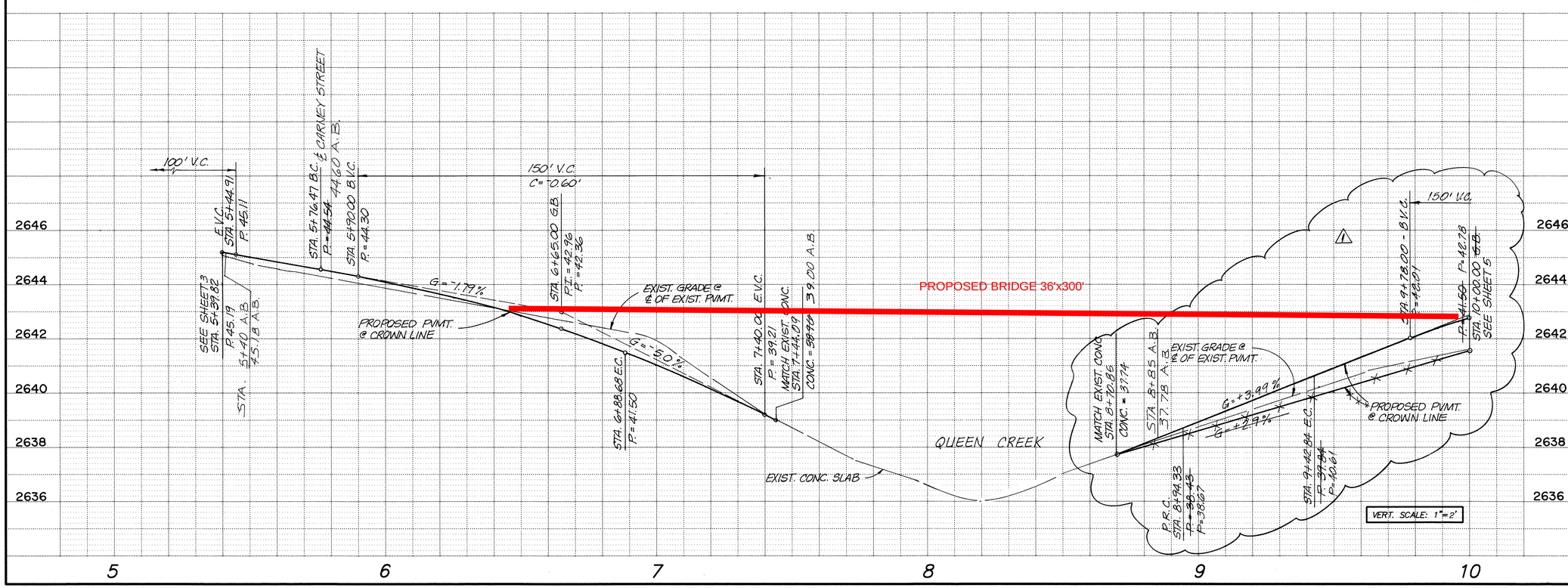

CONSTRUCTION NOTES

- (A) CONSTRUCT 3" ASPHALTIC CONCRETE PAVING ON 8" AGGREGATE BASE COURSE PER. TYP. SECT. "A" ON SHEET 2.
- (B) CONSTRUCT CONCRETE VALLEY GUTTER PER. M.A.G. STD. DETAIL 240.
- (C) CONSTRUCT PAVEMENT SECTION AT TERMINATION PER. M.A.G. STD. DET. 201 TYPE "A"
- (D) INSTALL BRASS CAP PER. M.A.G. STD. DETAIL 120-1 TYPE "B".
- (E) CONSTRUCT PAVED TURNOUT PER. M.A.G. STD. DETAIL 205.
- (I) ADJUST EXIST. SEWER M.H. TO FINISH GRADE PER. M.A.G. STD. DET. 420 AND 422.
- (K) CONSTRUCT GUARD RAIL G4 (1S)(STEEL POST) PER. A.D.O.T. STD. DRAWING C-10.05 WITH GUARDRAIL FLARED END SECTION PER. STD. DRAWING C-10.21, C-10.16, AND BCI ASSEMBLY (STEEL) PER. STD. DRAWING C-10.17
- (M) INSTALL SIGN POST PER M.A.G. STD. DET. 131 TYPE "A" WITH TYPE "B" BASE AND R1-1 STOP SIGN PER MANUAL ON UNIFORM TRAFFIC CONTROL DEVICES.
- (N) INSTALL SIGN POST PER M.A.G. STD. DET. 131 TYPE "A" WITH TYPE "B" BASE AND W1-4R REVERSE TURN SIGN AND R2-1 15 MPH SPEED LIMIT SIGN PER MANUAL ON UNIFORM TRAFFIC CONTROL DEVICES.

RELOCATIONS

1. EXISTING POWER POLE TO BE RELOCATED BY OTHERS.
2. EXISTING SIGN TO BE RELOCATED 6' CLEAR FROM EDGE OF PAVEMENT.

MISCELLANEOUS NOTES

1. PROTECT IN PLACE
3. MATCH EXISTING PAVEMENT PER DETAIL ON SHEET 2.
4. MATCH EXISTING CONCRETE CROSSING PER DETAIL ON SHEET 2.

REMOVALS

1. REMOVE EXISTING ASPHALTIC PAVEMENT..

1 REVISED 10-10-1994 ADDENDUM No 2

CALL TWO WORKING DAYS BEFORE YOU DIG 263-1100 1-800-STAKE-IT (OUTSIDE MARICOPA COUNTY)

WILLDAN ASSOCIATES
ENGINEERS · PLANNERS
1717 W. NORTHERN AVE. SUITE 112, PHOENIX, ARIZONA 85021
(602) 870-7600

TOWN OF SUPERIOR
MARY DRIVE
STREET IMPROVEMENTS
C.D.B.G. PROJECT 150-91

SCALE: 1" = 20'	DATE: 8-94
DESIGNED BY: K. RUNION	REVISION DATE: -
DRAWN BY: W.D.O.	JOB NO.: 08796
CHECKED BY:	SHEET 4 of 11
DRAWING NAME 8796-04	LAST UPDATE 5-1-95

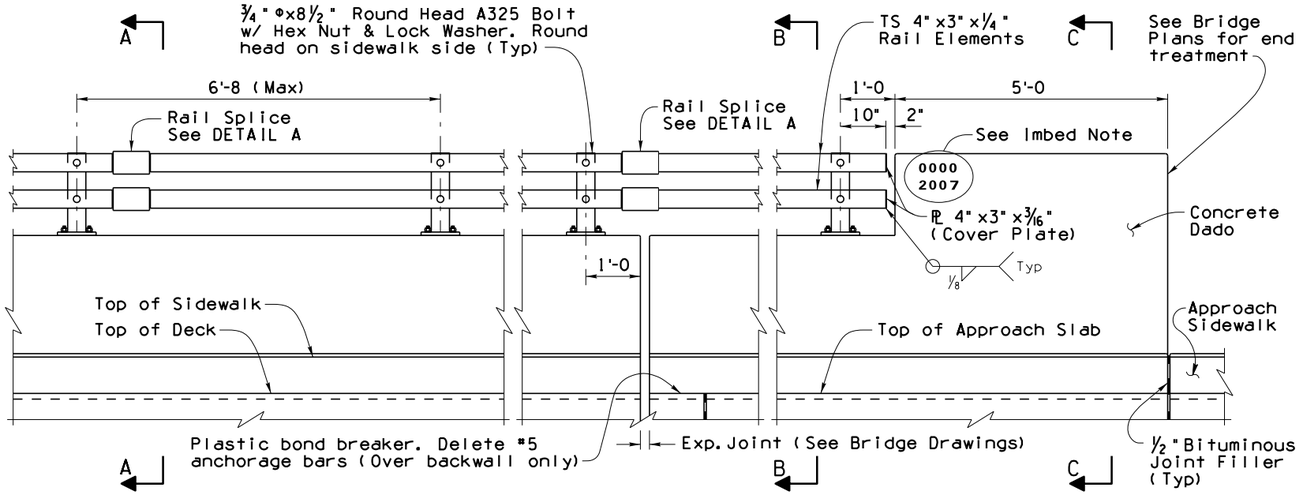

TYPICAL PANEL ELEVATION

ELEVATION AT EXP. JT.

ELEVATION AT END POST

NOTE:

For rail splices not at expansion joints, provide 1 inch gap and weld both ends of splice tube

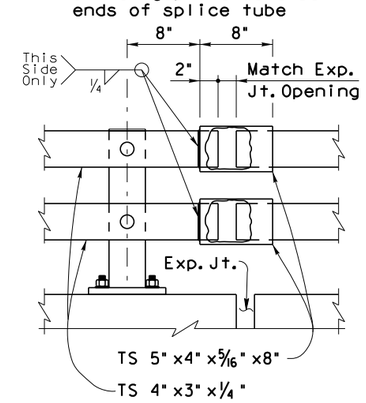

DETAIL A

(Exp. Splice Shown)

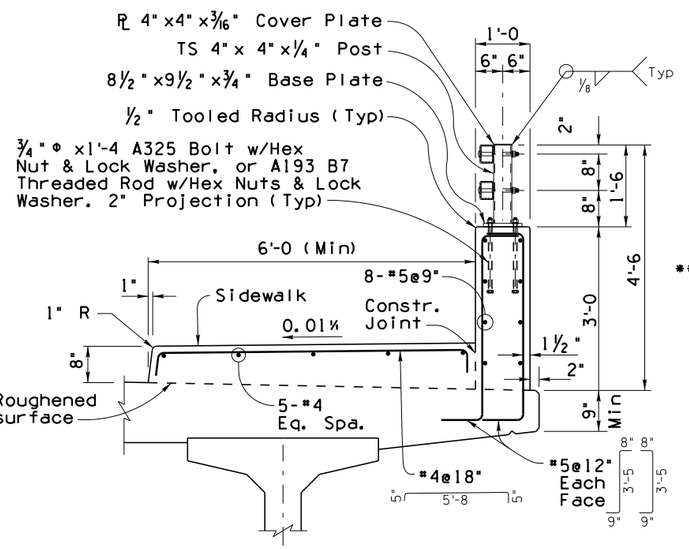

SECTION A-A

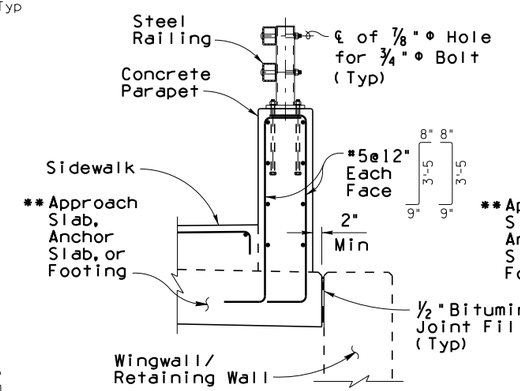

SECTION B-B

** See SD 1.10 for footing details

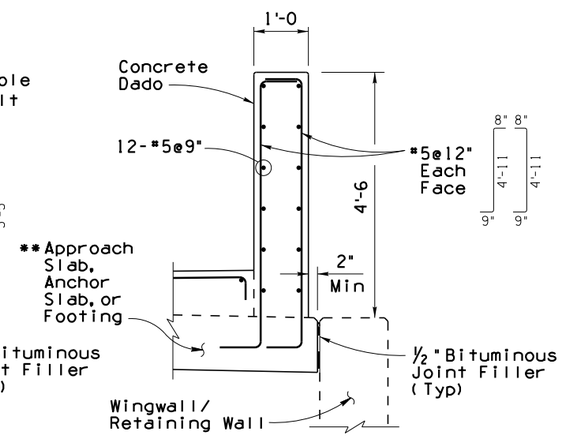

SECTION C-C

GENERAL NOTES:

Construction Specification - Arizona Department of Transportation Standard Specifications for Road and Bridge Construction, latest Edition.

Design Specifications - AASHTO LRFD Bridge Design Specifications, 8th Edition 2017.

This barrier has been evaluated and approved to be of equal strength to barriers with like geometry, which were successfully crash tested to meet MASH 16 requirements for Test Level 4.

Design Loads:

Dynamic Load (For barrier Design) = 80^k

Dynamic load is based on NCHRP 20-07(395) MASH Equivalency of NCHRP Report 350 - Approved Bridge Railings.

Equivalent Static Load (For footing design) = 28^k

Footing design is based on NCHRP Report 663.

All Concrete shall be Class "S" (f'c = 4000 psi).

Reinforcing steel shall conform to ASTM Specification A615. All reinforcing shall be furnished as Grade 60. All reinforcing shall be epoxy coated at locations above EL. 4000 ft.

All bends and hooks shall meet the requirements of AASHTO LRFD Article 5.10. All bend dimensions for reinforcing steel shall be out-to-out of bars. All placement dimensions for reinforcing steel shall be to center of bars unless noted otherwise.

All reinforcing steel shall have 1 1/2 inch clear cover unless noted otherwise.

Structural tubing (TS) shall be ASTM A500 Grade B. All other structural steel shall conform to ASTM A36 unless noted otherwise.

All welding shall conform to the requirements of the American Welding Society, ANSI/AASHTO/ AWS D1.5 Bridge Welding Code, latest Edition.

Concrete parapets on continuous superstructures shall have 1/2" bituminous joint filler in open joints over piers.

Imbed 1/2", Bridge Number and Year Built, using 1 1/2"w x 2"h number impressions in concrete, located as shown at the approach end of the outside lane.

Labor and materials for railing, parapet, dado, anchorage bars, sidewalk and PEDESTRIAN FENCE (SD 1.13) are included in the pay item (Item No. 6011132).

Dimensions shall not be scaled from drawings.

Item	Combination Pedestrian-Traffic Bridge Railing
Item No.	6011132
Measurement	Linear Foot

RAILING NOTES:

See Bridge Plans for rail layout, elevation, joint locations and rail end treatments.

All exposed steel edges shall be ground smooth. All structural steel rail assembly components shall be galvanized after fabrication in accordance with ASTM A123. All galvanizing that has been damaged in handling, transportation or welding shall be repaired by the application of a paste compound of an approved zinc powder and flux.

All post bolt heads shall be on sidewalk side. All bolts, nuts and washers shall be galvanized in accordance with the requirements of ASTM A153.

For fence attachment details, see SD 1.13. (Lower rail tube is not required with fence).

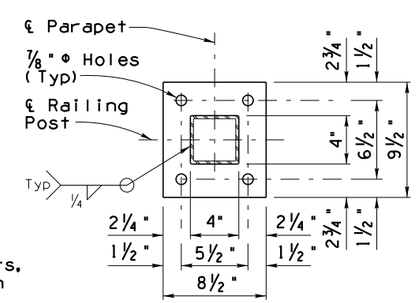

PLATE DETAIL

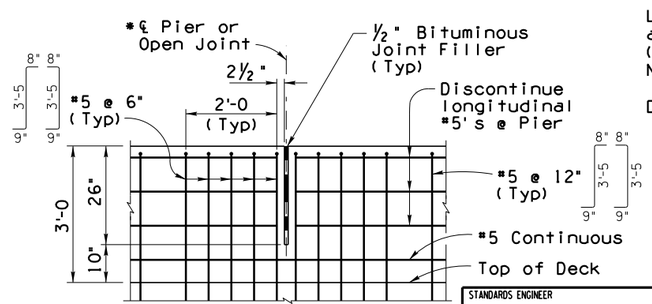

OPEN JOINT SECTION AT CONTINUOUS PIERS ONLY

* Parapet Stirrups Reinforcement at expansion joints is similar to stirrup reinforcement near open joints at continuous piers

Note to Designer:
The information presented in this Standard Drawing has been prepared in accordance with recognized engineering principles and is for general use. It should not be used for specific application without competent professional examination and verification of its suitability and applicability by a licensed professional engineer. Contents within the inner border line shall not be altered.

PRIOR DISTRIBUTION DATE	03/09

STANDARDS ENGINEER A. ALZUBI RECOMMENDED FOR APPROVAL GROUP MANAGER D. EBERHART APPROVED STANDARDS COMMITTEE APPROVED FOR DISTRIBUTION 01/20 DATE	ARIZONA DEPARTMENT OF TRANSPORTATION INFRASTRUCTURE DELIVERY AND OPERATIONS DIVISION BRIDGE GROUP STANDARD DRAWING COMBINATION PEDESTRIAN-TRAFFIC BRIDGE RAILING DRAWING NO. SD 1.12

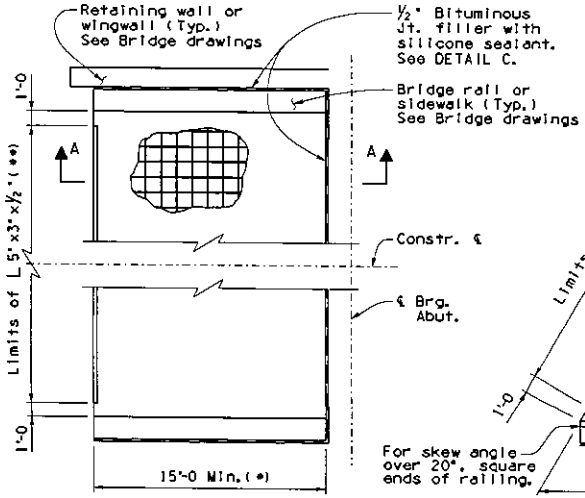

PLAN A
Rt. Angle Bridge

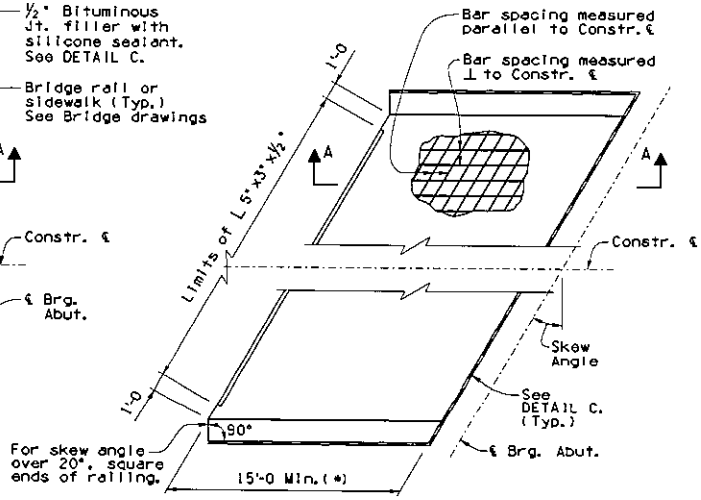

PLAN B
Skewed Bridge Without Anchor Slab
Skew Angle ≤ 45°

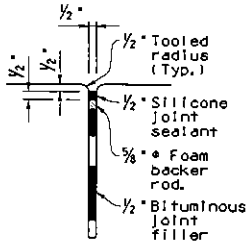

DETAIL C

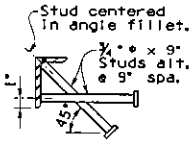

ALT. ANCHOR DETAIL

GENERAL NOTES:

Construction Specification - Arizona Department of Transportation Standard Specifications for Road and Bridge Construction, latest Edition.

Design Specifications - AASHTO LRFD Bridge Design Specifications, 4th Edition 2007.

All Concrete shall be Class "S" (f'c = 4000 psi).

Reinforcing steel shall conform to ASTM Specification A615. All reinforcing shall be furnished as Grade 60. All reinforcing shall be epoxy coated at locations above EL. 4000 ft.

All bends and hooks shall meet the requirements of AASHTO Article 5.10. All bend dimensions for reinforcing steel shall be out-to-out of bars. All placement dimensions for reinforcing steel shall be to center of bars unless noted otherwise.

All reinforcing steel shall have 2 inch clear cover unless noted otherwise.

Structural steel shall conform to ASTM specification A588 Grade 50 or A709 Grade 50W.

All welding shall conform to the requirements of the American Welding Society, ANSI/AASHTO/AWS D1.5 Bridge Welding Code, latest Edition.

Dimensions shall not be scaled from drawings.

Item No. 6011371 APPROACH SLAB
Measure: Square Foot

JOINT NOTE:

½" Silicone joint sealant shall be ASTM D5893 Type NS. 2" Silicone joint sealant shall be rapid-cure, self leveling, two-part silicone rubber sealant designed for expansion joints. Prime coat concrete sides of joint. Do not prime coat the backer rod. Backer rod shall be closed cell polyethylene foam.

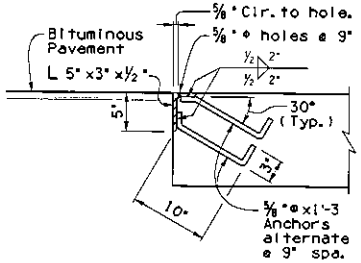

DETAIL A
Bituminous Pavement Alternate

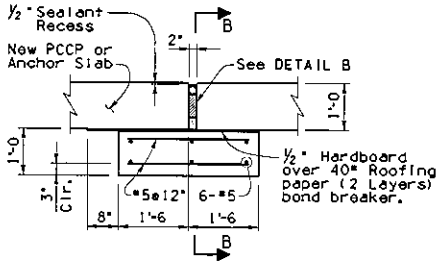

DETAIL A
Concrete Pavement Alternate

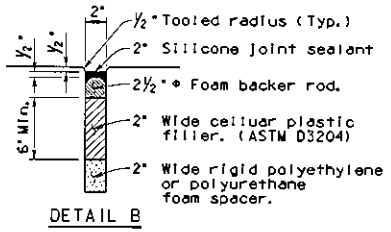

DETAIL B

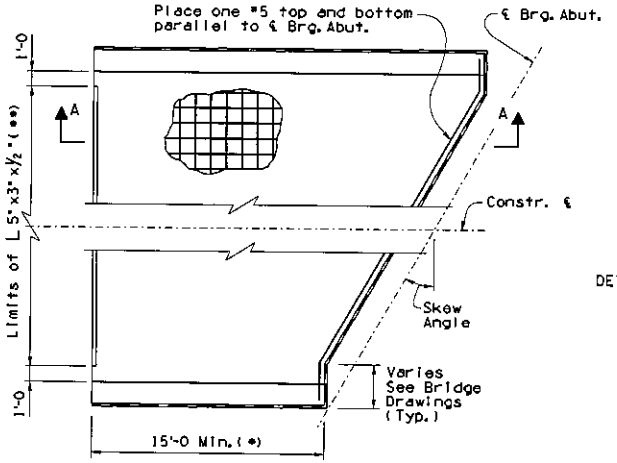

PLAN C
Skewed Bridge
Skew Angle > 45°

(**) Omit total guard angle for concrete pavement alternate.

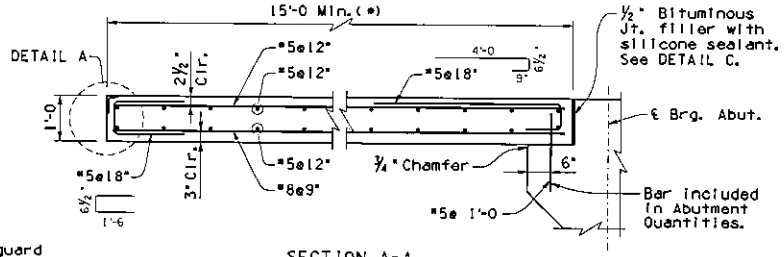

SECTION A-A

(*) See Bridge drawings for length.

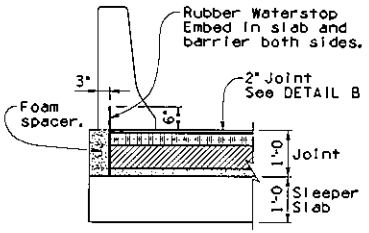

SECTION B-B

Note to Designer:
The information presented in this Standard Detail has been prepared in accordance with recognized engineering principles and is for general use. It should not be used for specific application without competent professional examination and verification of its suitability and applicability by a licensed professional engineer. Contents within the inner border line shall not be altered.

NO.	DESCRIPTION OF REVISIONS	BY	DATE
1	Original Issue	AJK	11-90
2	General Update	SJA	12-07
3			
4			

DESIGN APPROVED: Shafi U. Hasan
APPROVED FOR DISTRIBUTION: Jean A. Nehme

ARIZONA DEPARTMENT OF TRANSPORTATION
INFRASTRUCTURE DELIVERY AND OPERATIONS DIVISION
BRIDGE GROUP STRUCTURE DETAIL

APPROACH SLAB DETAILS

ROUTE | PROJECT NO. | F.A. NO. | DRAWING NO. SD 2.01
LOCATION | SHEET NO. OF

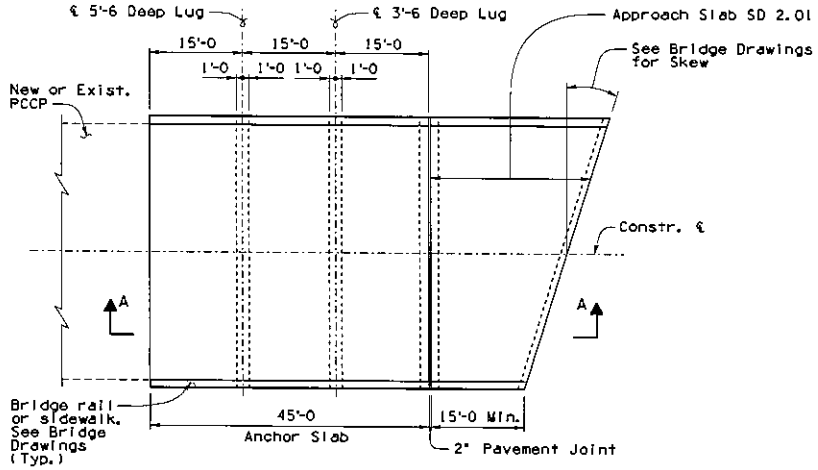

PLAN - TYPE 1 ANCHOR SLAB
(For Pavement greater than 700 Ft. in length)

GENERAL NOTES:

Construction Specification - Arizona Department of Transportation Standard Specifications for Road and Bridge Construction, latest Edition.

Design Specifications - AASHTO LRFD Bridge Design Specifications, 4th Edition 2007.

All Concrete shall be Class "S" (f'c = 4000 psi).

Reinforcing steel shall conform to ASTM Specification A615. All reinforcing shall be furnished as Grade 60. All reinforcing shall be epoxy coated at locations above EL. 4000 ft.

All bends and hooks shall meet the requirements of AASHTO Article 5.10. All bend dimensions for reinforcing steel shall be out-to-out of bars. All placement dimensions for reinforcing steel shall be to center of bars unless noted otherwise.

All reinforcing steel shall have 3 inch clear cover unless noted otherwise.

Anchor lugs shall be cast in precompacted roadway embankment or cast in forms and soil compacted to embankment requirements around lugs prior to casting the Anchor Slab.

Dimensions shall not be scaled from drawings.

Item No. 6011372 TYPE 1 ANCHOR SLAB
Measure: Square Foot

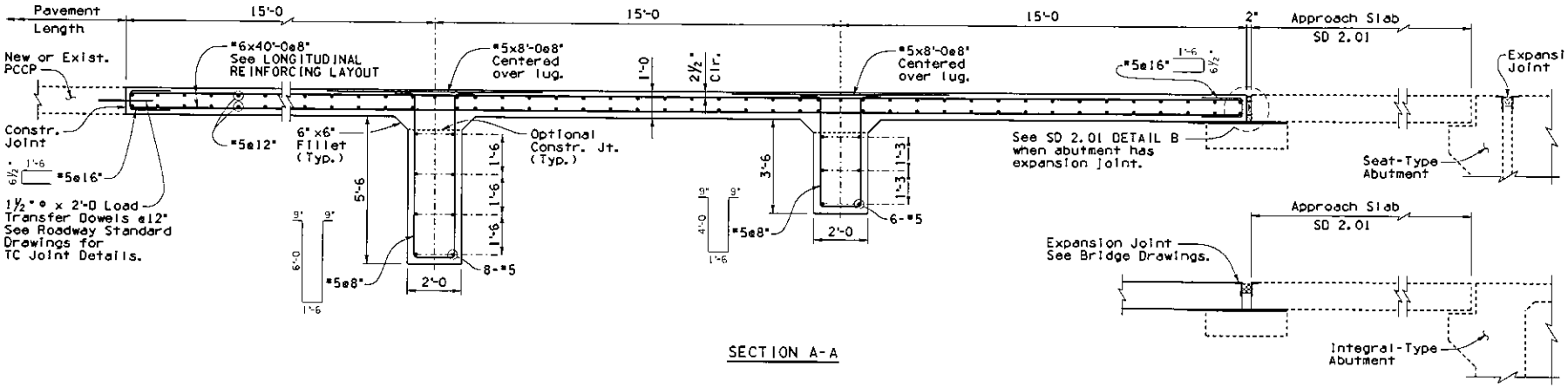

SECTION A-A

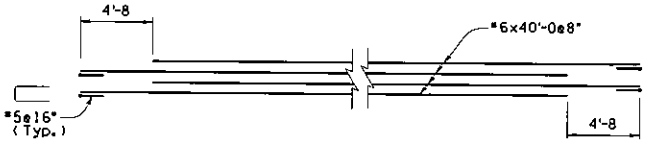

LONGITUDINAL REINFORCING LAYOUT

Note to Designer:
The information presented in this Standard Detail has been prepared in accordance with recognized engineering principles and is for general use. It should not be used for specific application without competent professional examination and verification of its suitability and applicability by a licensed professional engineer. Contents within the inner border line shall not be altered.

NO.	DESCRIPTION OF REVISION	MADE BY	DATE
1	Original Issue	J.A.A.	11-00
2	General Update	S.A.H.	10-01
3			
4			

DESIGN APPROVED: Shafi K. Hasan
APPROVED FOR DISTRIBUTION: Jean A. Nehme

ARIZONA DEPARTMENT OF TRANSPORTATION
INFRASTRUCTURE DELIVERY AND OPERATIONS DIVISION
BRIDGE GROUP STRUCTURE DETAIL

TYPE I ANCHOR SLAB DETAILS

ROUTE | PROJECT NO. | F.A. NO. | DRAWING NO. SD 2.02
LOCATION | SHEET NO. OF

19-JAN-2016 16:36 G:\Bridge\CADD\Standards\SD_Sheets\SD 2 Approaches\sd202_1516.dgn

NOTE:

A, B, C and D equal spaces are measured along slope (8 feet max. vert. and 15 feet max. horiz.) Bridge Drawings shall show site specific layout, dimensions and slope of the paving at bridge abutments.

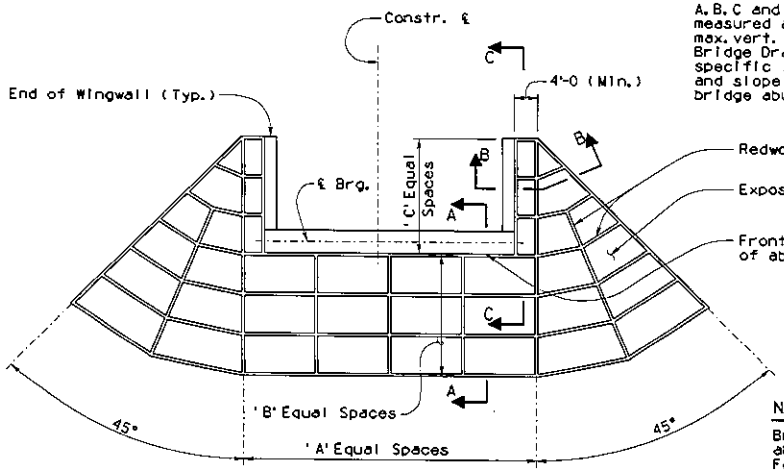

PLAN - RIGHT ANGLE BRIDGE

NOTE:

Bridge abutments are shown above embankment fills. For bridge abutments located within cut sections, the 45° triangular area at each edge is not required.

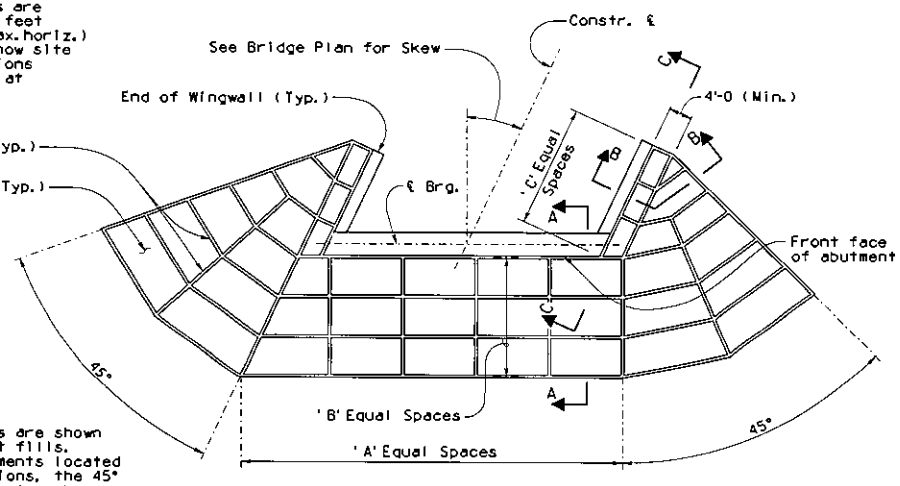

PLAN - SKEW BRIDGE

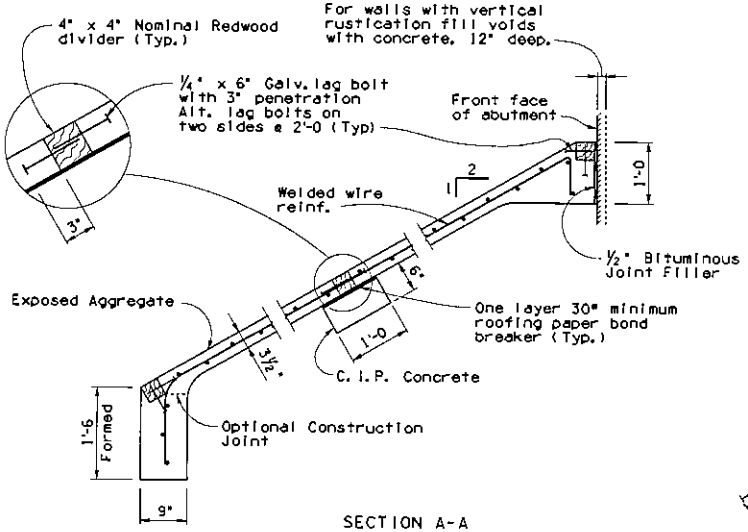

SECTION A-A

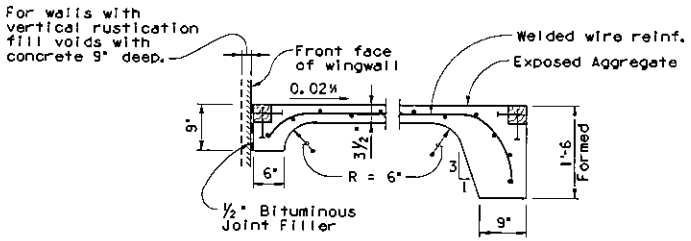

SECTION B-B

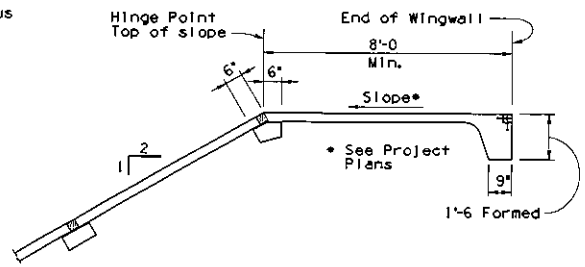

SECTION C-C

GENERAL NOTES:

Construction Specification - Arizona Department of Transportation Standard Specifications for Road and Bridge Construction, latest Edition.

Design Specifications - AASHTO LRFD Bridge Design Specifications, 4th Edition 2007.

Concrete for slope paving shall be Class "S", (f'c = 3000 psi) with exposed aggregate surface. Maximum size coarse aggregate shall be ¾ inch. Shotcreting shall not be allowed.

Welded Wire Reinforcement 6 x 6 - W2.5 x W2.5 shall conform to ASTM A185.

Slope paving is shown for 2:1 slopes. Slope paving may not be required for slopes less than 3:1 (See Project Plans).

Item No. 9210007 SLOPE PAVING
Measure: Square Yards

NO.	DESCRIPTION OF REVISIONS	BACK BY	DATE
0	Original issue	M. Sung	11-02
2	Updated to include underpass and overpass ISO 2.05 standards.	S.BUCK	09-09
3			
4			

Note to Designers:
The information presented in this Standard Detail has been prepared in accordance with recognized engineering principles and is for general use. It should not be used for specific application without competent professional examination and verification of its suitability and applicability by a licensed professional engineer. Contents within the inner border line shall not be altered.

DESIGN APPROVED: Shafi U. Haran
APPROVED FOR DISTRIBUTION: Jean A. Nehme

ARIZONA DEPARTMENT OF TRANSPORTATION
INFRASTRUCTURE DELIVERY AND OPERATIONS DIVISION
BRIDGE GROUP STRUCTURE DETAIL

SLOPE PAVING DETAILS

ROUTE | PROJECT NO. | F.A. NO. | DRAWING NO. SD 2.04
LOCATION | SHEET NO. OF

19-JAN-2016 13:38 G:\Bridge\CADD\Standards\SD_Sheets\SD 1Railing\sd204_0909.dgn

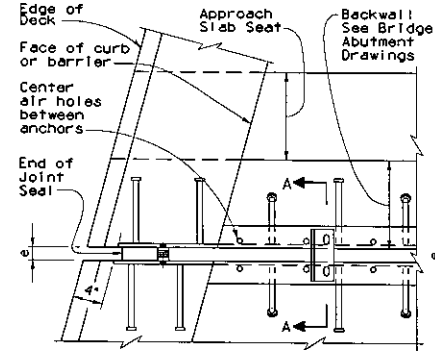

FOR SKEWS 0° THRU 20°

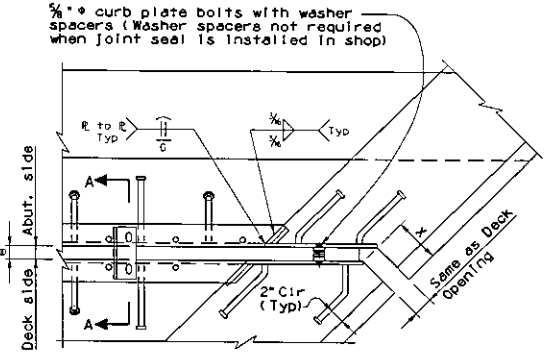

FOR SKEWS 21° THRU 45°

PLAN

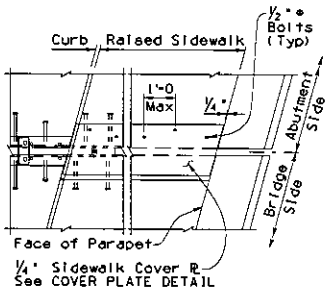

PLAN AT SIDEWALK

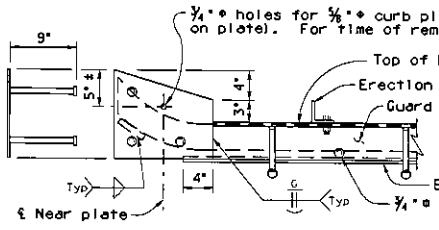

FOR SKEWS 0° THRU 20°

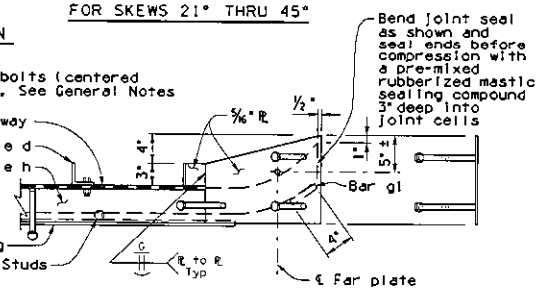

FOR SKEWS 21° THRU 45°

ELEVATION
(Near angle shown, far angle similar)

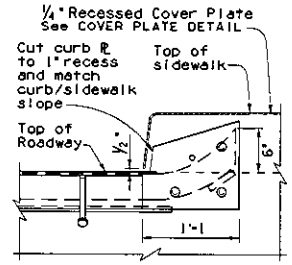

ELEVATION AT SIDEWALK

Polychloroprene Cellular Joint Seal (Nominal Dimensions - Inches)				
	2 x 2	3 x 3	4 x 4	5 x 5
a	6 1/2	7	7 1/2	8
b	1 3/8	1 5/16	1 1/4	1 1/4
c	3 3/4	4 3/8	5	5 1/2
d	L 2x2x1/4	L 3x3x3/8	L 3 1/2 x3 1/2 x3/8	L 4x4x3/8
e max	1.625	2.500	3.375	4.250
e min	0.875	1.250	1.625	1.750
f	3 5/8	4 5/8	5 5/8	6 5/8
g or gl	1/4 x3/4 bar	3/8 x3/4 bar	1/2 x3/4 bar	5/8 x3/4 bar
h	L 5x3x3/8	L 5x3x3/8	L 6x3 1/2 x3/8	L 7x4x1/2
M.R.	3/4	1 1/4	1 3/4	2 1/2

M.R. = Movement rating (The difference between the smallest and the largest width of seal in place)

Skew Angle	21°-33°	34°-36°	37°-40°	41°-43°	44°-45°
Dimension X	4"	4 1/2"	5"	5 1/2"	6"

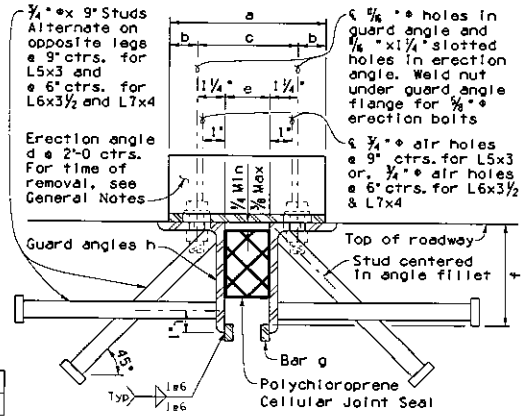

SECTION A-A

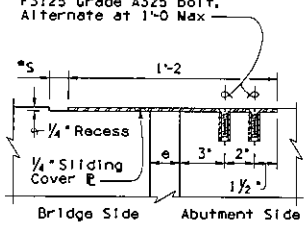

COVER PLATE DETAIL

*S = M.R./2 + 1/2"

GENERAL NOTES:

Construction Specification - Arizona Department of Transportation Standard Specifications for Road and Bridge Construction, latest Edition.

Design Specifications - AASHTO LRFD Bridge Design Specifications, 8th Edition 2017.

Structural steel shall conform to ASTM A588 Grade 50 or A709 Grade 50W.

Steel anchor studs shall conform to ASTM A108 Grades 1015, 1018 or 1020.

Cellular joint seal shall meet the requirements of ADOT Standard Specification 1011-5.

Sidewalk cover plate shall be galvanized A36 steel with non-slip (deformed) surface. All cover plate bolts shall be A325 galvanized.

The bottom of the barrier or curb sliding cover plates shall be 1/2" higher than the top of the roadway.

All welding shall conform to the requirements of the American Welding Society, Bridge Welding Code, D1.5, latest Edition.

Guard angles and cellular seal shall be one piece, without splices, for lengths 60 feet or less.

For lengths over 60 feet or phase construction, guard angles and cellular seal may be two pieces butted together at crown or another location away from drainage.

Prior to installation of the seal and lubricant adhesive, steel contact surfaces with the seal shall be cleaned and prepared in accordance with the seal mfg. requirements.

Joint opening e shall be adjusted in the field for any variation of temperature above or below the mean temperature. See bridge drawings for mean temperature and temperature correction chart.

Erection angles and curb plate bolts shall be removed immediately after deck joint is fully encased in concrete (except curb or barrier concrete), and such concrete has attained it's initial set (2 hours ±).

Holes for curb plate bolts shall be plugged before placing curb/barrier concrete.

The Contractor shall take due care in the placement of the concrete under the joint angles to ensure that proper consolidation is achieved. After placement, the Engineer shall inspect the joint for voids by sounding the angle with a hammer. All voids shall be repaired by the Contractor by epoxy injection at no cost to the Department.

Dimensions shall not be scaled from drawings.

Item No.	Deck Joint Assembly	Measure
6011346	2x2 Compression Seal	LF
6011347	3x3 Compression Seal	LF
6011348	4x4 Compression Seal	LF
6011349	5x5 Compression Seal	LF

Note to Designer:
The information presented in this Standard Drawing has been prepared in accordance with recognized engineering principles and is for general use. It should not be used for specific application without competent professional examination and verification of its suitability and applicability by a licensed professional engineer. Contents within the inner border line shall not be altered.

PRIOR DISTRIBUTION DATE 06/09

STANDARDS ENGINEER
A. ALZUBI
RECOMMENDED FOR APPROVAL
GROUP MANAGER
D. EBERHART
APPROVED
STANDARDS COMMITTEE APPROVED FOR DISTRIBUTION 01/20
DATE

ARIZONA DEPARTMENT OF TRANSPORTATION
INFRASTRUCTURE DELIVERY AND OPERATIONS DIVISION
BRIDGE GROUP STANDARD DRAWING

DECK JOINT ASSEMBLY
COMPRESSION SEAL

DRAWING NO.
SD 3.01

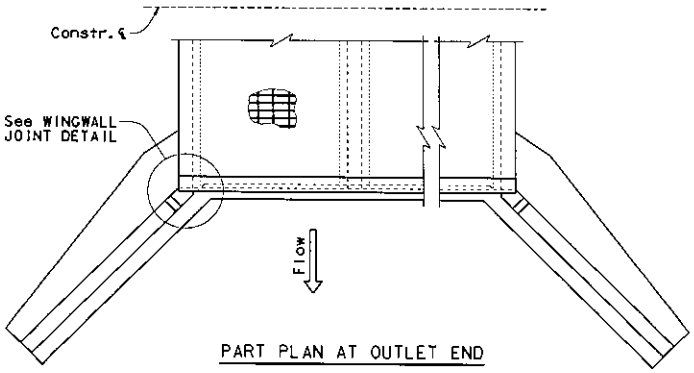

PART PLAN AT OUTLET END

NOTE:
For SECTION E-E see Dwg. (2 of 5)

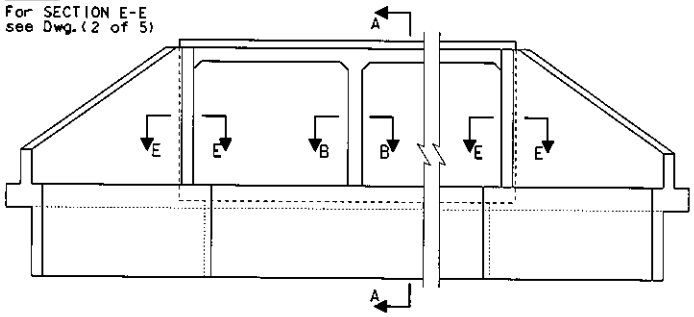

ELEVATION AT OUTLET END

NOTE A:
Use 3-#7 @3" spa. top and bott bars for culverts skewed 6° to 30°.
Use 3-#8 @3" spa. top and bott bars for culverts skewed 31° to 45°.
Culverts skewed over 45° require a special edge beam design.
Edge beam reinforcing quantity shall be added to table quantities.

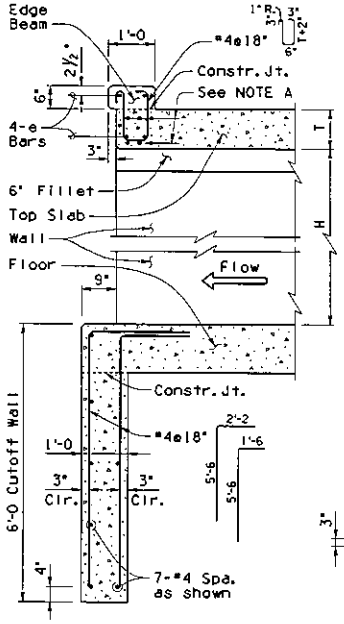

SECTION A-A

e Bars			
Skew Δ	Span		
	6' & 8'	10'	12'
0° to 20°	#6	#6	#6
25° & 30°	#6	#6	#7
35°	#6	#7	#8
40° & 45°	#6	#7	#9

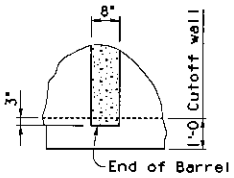

SECTION B-B

NOTE:
Wing wall footing shall be contiuous with no joint.

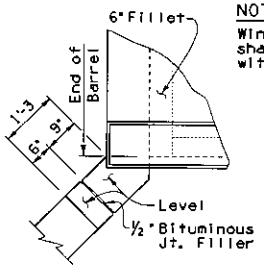

WINGWALL JOINT DETAIL
(For Barrel Height < 8 Ft.)

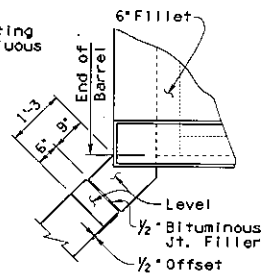

WINGWALL JOINT DETAIL
(For Barrel Height ≥ 8 Ft.)

NOTE:
Special design sections shall be adjoined with standard barrels when necessary.

Culvert barrels always begin and end with Table No. I.

Thickness of top and bottom slabs vary with depths of fill as shown.

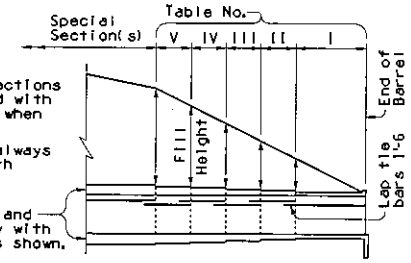

DIAGRAM SHOWING TABLE NO. TO BE USED FOR VARIOUS FILL HEIGHTS

GENERAL NOTES:

Construction Specification - Arizona Department of Transportation Standard Specifications for Road and Bridge Construction, latest Edition.

Design Specifications - AASHTO LRFD Bridge Design Specifications, 7th Edition 2014.

Loading Class - HL-93.

Design:
Soil weight = 120 p.c.f.

All Concrete shall be Class "S" (f'c = 3000 psi).

Reinforcing steel shall conform to ASTM Specification A615. All reinforcing shall be furnished as Grade 60.

All bends and hooks shall meet the requirements of AASHTO LRFD Article 5.10. All bend dimensions for reinforcing steel shall be out-to-out of bars. All placement dimensions for reinforcing steel shall be to center of bars unless noted otherwise.

All reinforcing steel shall have 2" clear cover unless noted otherwise.

Chamfer all exposed corners ¾" unless noted otherwise.

Compact backfill for footing and wing base minimum 100 percent of ASTM D698 maximum dry density.

All structures shall have formed Construction joints in the top slab and walls (optional in floor slab) and spaced not more than 38'-6" apart or as shown in Project Plans. Joints shall be perpendicular to the centerline of the box. Reinforcing steel shall project 1'-6 thru the joint. The joint shall be made with a ¼" plywood bulkhead which shall be left in place or the alternate joint detail shown on Dwg. (2 of 5) may be used.

See Project Plans for culvert layout, invert elevations, finished grade elevations, headwall, apron, and other site specific details.

Dimensions shall not be scaled from drawings.

Pay item quantities of concrete and reinforcing steel include all labor and materials for box culvert, footing, headwalls, and aprons.
Total Quantities include Barrel and Headwall Quantities shown in Tables (plus added quantity for apron when used). Barrel Quantities Table is per linear foot of box (multiply by length of box to obtain barrel total). Headwall Quantities Table includes wings, edge beam, and cutoff wall.

Culverts measuring 20 ft and greater to the inside faces of exterior walls, along the roadway centerline, shall be assigned a structure number. The structure number shall be referenced in the culvert summary sheet and drainage details.

NOTE:
For Dimensions, Quantities and additional Details, see SD 6.01 (2 to 5).

DESIGN APPROVAL	ARIZONA DEPARTMENT OF TRANSPORTATION INFRASTRUCTURE DELIVERY AND OPERATIONS DIVISION BRIDGE GROUP STRUCTURE DETAIL
APPROVED FOR DISTRIBUTION	REINFORCED CONCRETE BOX CULVERTS MISCELLANEOUS DETAILS
POWER / PROJECT NO. / F.A. NO.	DRAWING NO. SD 6.01 (1 of 5)
LOCATION	SHEET NO. OF

NO.	DESCRIPTION OF REVISIONS	INITIAL	DATE
1	Original Issue	SJA	2-12
2	General Updates	B.B.	5-15
3			
4			

Note to Designer:
The information presented in this Standard Detail has been prepared in accordance with recognized engineering principles and is for general use. It should not be used for specific application without competent professional examination and verification of its suitability and applicability by a licensed professional engineer. Contents within the inner border line shall not be altered.

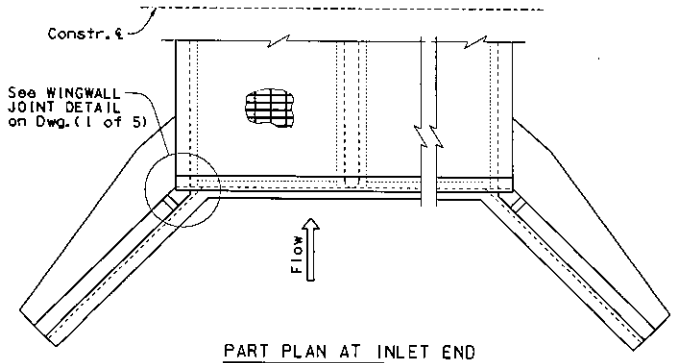

PART PLAN AT INLET END

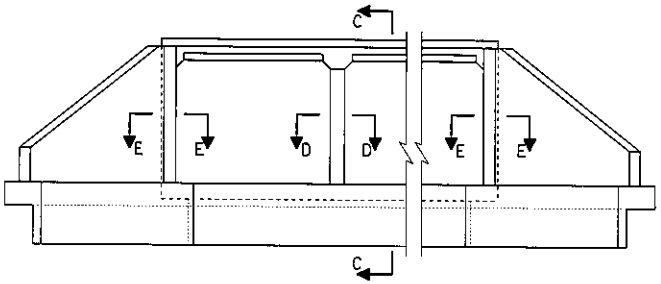

ELEVATION AT INLET END

NOTE A:

Use 3-#7 @3" spa. top and bott bars for culverts skewed 6° to 30°.
Use 3-#8 @3" spa. top and bott bars for culverts skewed 31° to 45°.
Culverts skewed over 45° require a special edge beam design.
Edge beam reinforcing quantity shall be added to table quantities.

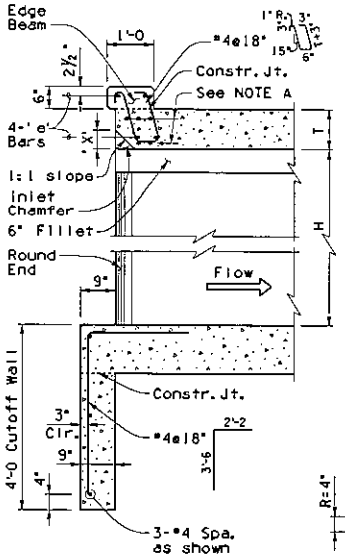

SECTION C-C

NOTE:

For 'e' Bars table, see Dwg. (1 of 5)

Span 'S'	Dim. 'X'
6'	3"
8'	4"
10'	5"
12'	6"

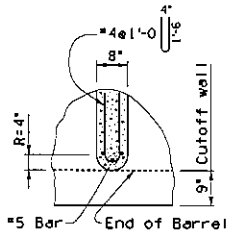

SECTION D-D

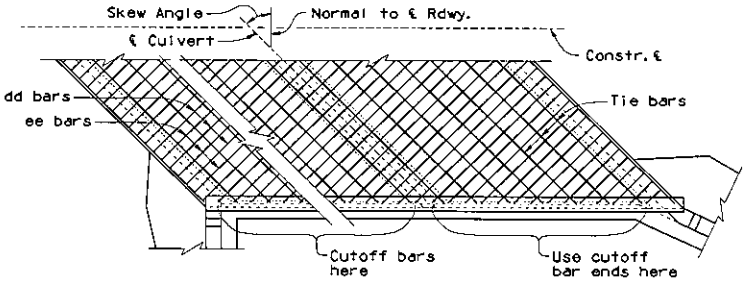

PART PLAN - SKEWED CULVERT
(Showing Reinf. Steel Placement)

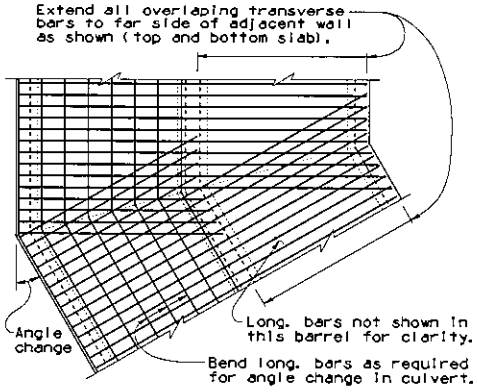

PART PLAN - ANGLED CULVERT
(Showing Reinf. Steel Placement)

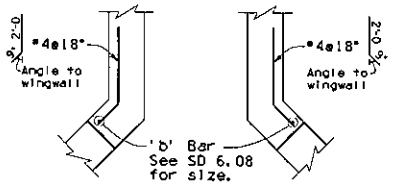

SECTION E-E

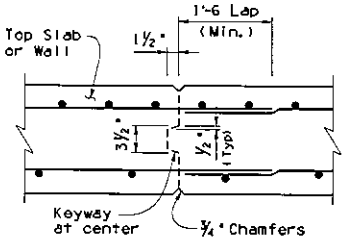

ALT. CONSTRUCTION JOINT DETAIL

NOTE:

For General Notes, Dimensions, Quantities and additional Details, see SD 6.01 (1 & 3, 4, 5).

DESIGN APPROVED: Shafi U. Haran	ARIZONA DEPARTMENT OF TRANSPORTATION INFRASTRUCTURE DELIVERY AND OPERATIONS DIVISION BRIDGE GROUP STRUCTURE DETAIL
APPROVED FOR DISTRIBUTION: Jean A. Nehme	REINFORCED CONCRETE BOX CULVERTS MISCELLANEOUS DETAILS
SOURCE / PROJECT NO. / F.A. NO.	DRAWING NO. SD 6.01 (2 of 5)
LOCATION	SHEET NO. OF

Note to Designer:
The information presented in this Standard Detail has been prepared in accordance with recognized engineering principles and is for general use. It should not be used for specific application without competent professional examination and verification of its suitability and applicability by a licensed professional engineer. Contents within the inner border line shall not be altered.

NO.	DESCRIPTION OF REVISIONS	MADE BY	DATE
1	Original Issue	S.G.H.	2-12
2			
3			
4			

20-JAN-2016 16:28 G:\Bridge\CADD\Standards\SD_Sheets\SD 6 Drainage Structures\SD 6.01-6.11 Series\SD6.01-1 to 5\sd601-2.1916.dgn

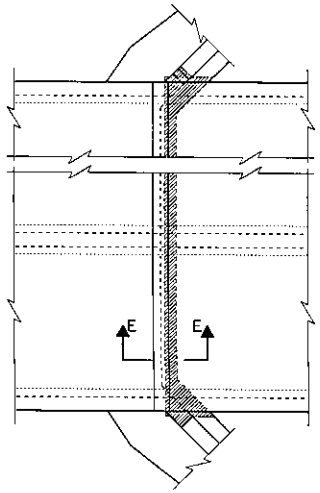

PART PLAN CULVERT EXTENSION
(Showing Right Angle Culvert)

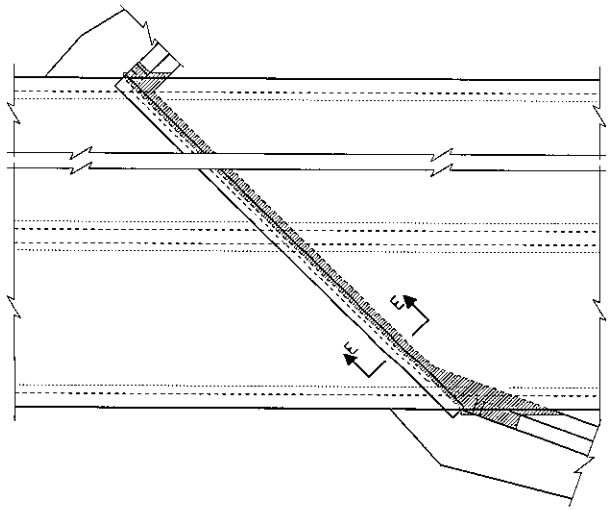

PART PLAN CULVERT EXTENSION
(Showing Skewed Culvert)

REMOVAL NOTE:

Indicates payment limits for removal of concrete.

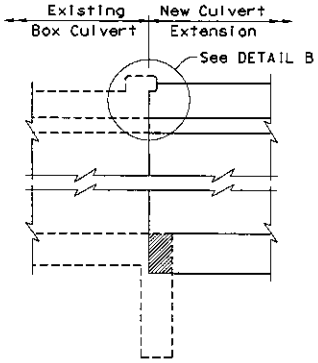

SECTION E-E

DOWEL NOTE:

Drill 1" ϕ hole, 8" deep, for #6 dowel. Epoxy dowel in hole with an approved epoxy adhesive. Epoxy anchorage shall develop a min. tensile pullout strength of 13 kips. Details of the Anchorage System shall be submitted to the Engineer for approval prior to installation.

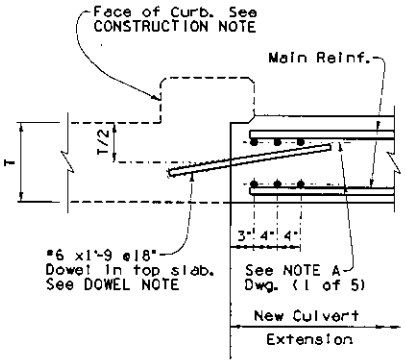

DETAIL B

CONSTRUCTION NOTE:

Remove existing headwall as required for new construction. If concrete headwall is removed to face of curb, no dowels are needed. Use projecting reinforcing steel for bond in new concrete. Curb to remain unless within 1'-0 of finish grade. Wingwalls to be removed a Min. of 1'-6" to provide steel for bond.

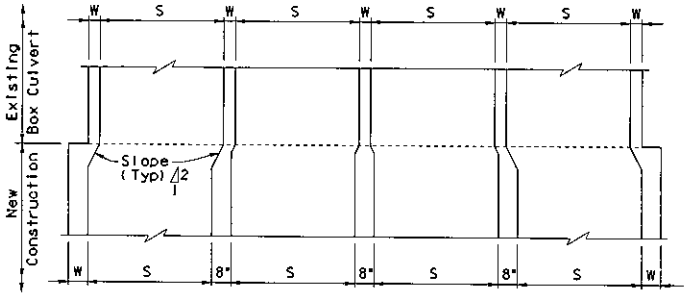

SECTION THRU CULVERT WALLS
(Even Number of Cells)

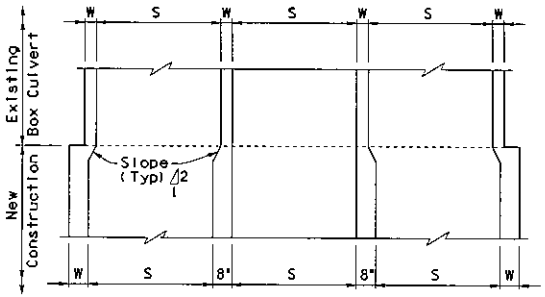

SECTION THRU CULVERT WALLS
(Odd Number of Cells)

NOTE:

For General Notes, Dimensions, Quantities and additional Details, see SD 6.01 (1, 2 & 4, 5).

Note to Designers:
The information presented in this Standard Detail has been prepared in accordance with recognized engineering principles and is for general use. It should not be used for specific application without competent professional examination and verification of its suitability and applicability by a licensed professional engineer. Contents within the inner border line shall not be altered.

NO	DESCRIPTION OF REVISIONS	DATE
1	Original Issue	
2		
3		
4		

DESIGN APPROVED: Shafi U. Horan	ARIZONA DEPARTMENT OF TRANSPORTATION INFRASTRUCTURE DELIVERY AND OPERATIONS DIVISION BRIDGE GROUP STRUCTURE DETAIL		
APPROVED FOR DISTRIBUTION: Jean A. Nehme	REINFORCED CONCRETE BOX CULVERTS EXTENSION DETAILS		
ROUTE	PROJECT NO.	F.A. NO.	DRAWING NO. SD 6.01 (3 of 5)
LOCATION			SHEET NO. OF

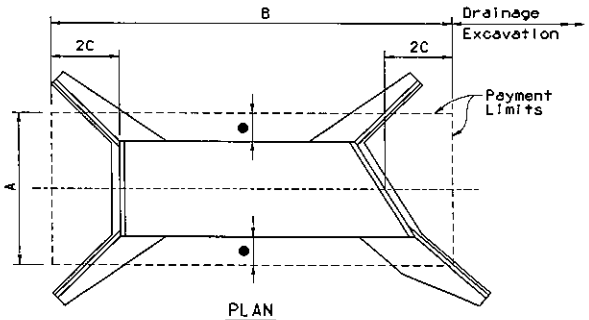

PLAN

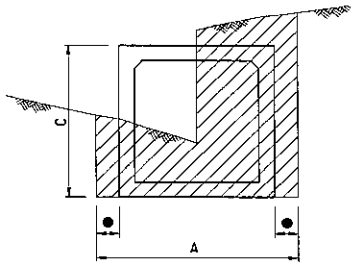

SECTION

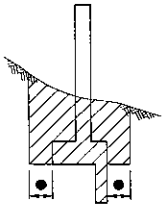

SECTION AT WING

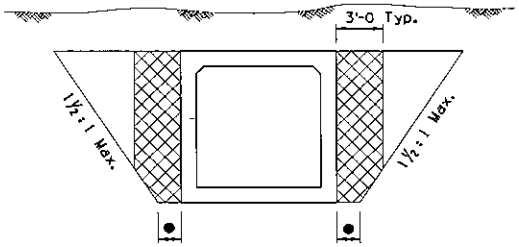

SECTION

STRUCTURAL EXCAVATION - PAYMENT LIMITS

NOTE:

Payment limits shown include structural excavation for headwalls, cutoffwalls, wingwalls, end sections, etc.

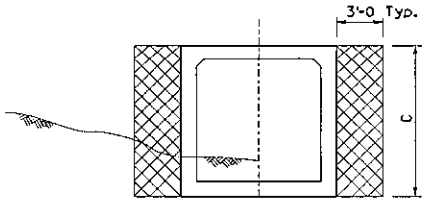

SECTION

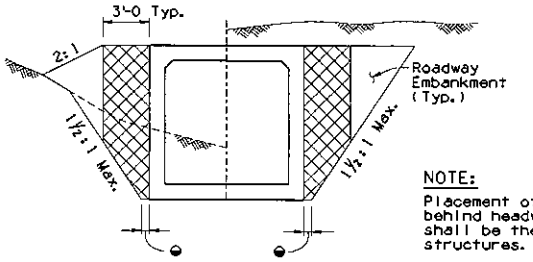

SECTION

NOTE:

Placement of structure backfill behind headwalls and wingwalls shall be the same as around structures.

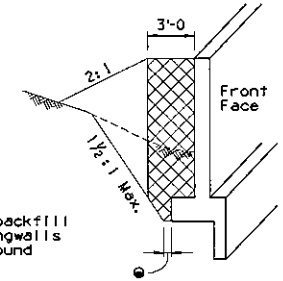

VIEW OF WING

Placement and compaction of backfill shall not be more than 2 feet higher than other side (for any number of boxes).

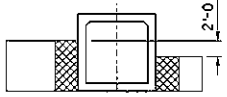

PLACEMENT DETAIL

STRUCTURE BACKFILL - MEASUREMENT

NOTE:

Computation of structure backfill quantities is based on the area of a typical installation times the total length of structure plus 2C.
Use C for box extensions on each end extended.
No measurment is necessary for wing arms.

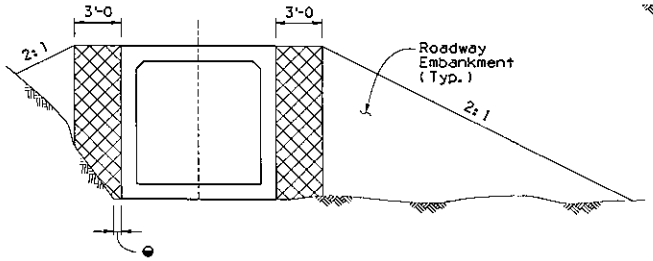

SECTION

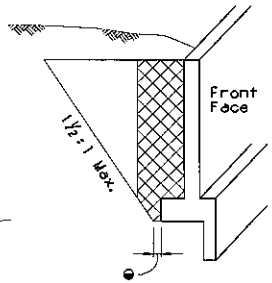

VIEW OF WING

STRUCTURE BACKFILL - PLACEMENT

LEGEND

A = Width
B = Length
C = Height of barrel or headwall without cutoff wall.
● = 6" Max. in rock and trench, 1'-6 max. all others
◒ = 6" Min. in rock and trench, 1'-6 min. all others
Indicates Structural Excavation
Indicates Structure Backfill
Indicates Roadway Embankment

NOTE:

For General Notes, Dimensions, Quantities and additional Details, see SD 6.01 (1, 2, 3 & 5).

Note to Designers:
The information presented in this Standard Detail has been prepared in accordance with recognized engineering principles and is intended for use by a qualified engineer. Any modification without consent professional examination and verification of its suitability and applicability by a licensed professional engineer, contents within the inner border line shall not be altered.

NO.	DESCRIPTION OF REVISIONS	MADE BY	DATE
1	Original Issue	SAMA	2-12
2			
3			
4			

DESIGN APPROVED: Shafi U. Haque
APPROVED FOR DISTRIBUTION: Jean A. Nehme

ARIZONA DEPARTMENT OF TRANSPORTATION
INFRASTRUCTURE DELIVERY AND OPERATIONS DIVISION
BRIDGE GROUP STRUCTURE DETAIL

REINFORCED CONCRETE BOX CULVERTS
STRUCTURAL EXCAVATION
& STRUCTURE BACKFILL

ROUTE | PROJECT NO. | T.A. NO. | DRAWING NO. SD 6.01 (4 of 5)
LOCATION | SHEET NO. OF

20-JAN-2016 16:33 G:\Bridge\CADD\Standards\SD_Sheets\SD 6 Drainage Structures\SD 6.01-6.11 Series\SD6.01-1 to 5\sd601-4_1916.dgn

TABLE NO. I
0'-10' FILL

Span "S"	Height "H"	Slab "T"	Walls "W"	aa Bar Size	aa Spacing	aa Length	cc Number +	ee Bar Size	ee Spacing	ee Length	gg Number +	hh Bar Size	hh Spacing	hh Length	F
6'	3'	9½"	9"	5	12"	4'-4	20	5	6"	7'-2	14	4	8"	5'-2	3'-0
	4'	9½"	9"	5	12"	5'-4	24	5	6"	7'-2	16	4	8"	5'-11	3'-0
	5'	9½"	9"	5	12"	6'-4	24	5	6"	7'-2	16	4	6"	6'-9	3'-0
	6'	9½"	9"	5	12"	7'-4	28	5	6"	7'-2	18	4	6"	7'-3	3'-0
	7'	9½"	9"	5	12"	8'-4	32	5	6"	7'-2	18	4	6"	7'-9	3'-0
8'	3'	10"	11"	5	12"	4'-5	20	5	6"	9'-6	18	4	6"	6'-2	3'-4
	4'	10"	11"	5	12"	5'-5	24	5	6"	9'-6	20	4	6"	6'-8	3'-4
	5'	10"	11"	5	12"	6'-5	24	5	6"	9'-6	20	4	6"	7'-2	3'-4
	6'	10"	11"	5	12"	7'-5	28	5	6"	9'-6	20	4	6"	7'-8	3'-4
	7'	10"	11"	5	12"	8'-5	32	6	8"	9'-6	22	4	6"	8'-2	3'-4
	8'	10"	11"	5	12"	9'-5	32	6	8"	9'-6	22	4	6"	8'-8	3'-4
10'	3'	10"	13"	5	12"	4'-5	20	6	8"	11'-10	22	5	6"	7'-4	4'-4
	4'	10"	13"	5	12"	5'-5	24	6	8"	11'-10	22	5	6"	7'-10	4'-4
	5'	10"	13"	5	12"	6'-5	24	6	7"	11'-10	24	5	6"	8'-4	4'-4
	6'	10"	13"	5	12"	7'-5	28	6	7"	11'-10	24	5	6"	8'-10	4'-4
	7'	10"	13"	5	12"	8'-5	32	6	7"	11'-10	26	5	6"	9'-4	4'-4
	8'	10"	13"	5	10"	9'-5	32	6	7"	11'-10	26	5	6"	9'-10	4'-4
	9'	10"	13"	5	10"	10'-5	36	6	7"	11'-10	28	5	6"	10'-4	4'-4
	10'	10½"	13"	5	10"	11'-6	40	6	7"	11'-10	28	5	6"	10'-10	4'-4
12'	8'	11½"	15"	5	9"	9'-8	32	7	7"	14'-2	38	6	6"	10'-5	4'-8
	9'	11½"	15"	5	9"	10'-8	36	7	7"	14'-2	38	6	6"	10'-11	4'-8
	10'	11½"	15"	5	8"	11'-8	40	7	7"	14'-2	40	6	6"	11'-5	4'-8
	11'	12"	15"	5	8"	12'-9	40	7	7"	14'-2	42	6	6"	11'-11	4'-8
	12'	12"	15"	5	8"	13'-9	44	7	6"	14'-2	46	6	6"	12'-5	4'-8

+ Total number of bars in the cross-section.

TABLE NO. II
10'-15' FILL

Span "S"	Height "H"	Slab "T"	Walls "W"	aa Bar Size	aa Spacing	aa Length	cc Number +	ee Bar Size	ee Spacing	ee Length	gg Number +	hh Bar Size	hh Spacing	hh Length	F
6'	3'	8"	9"	5	12"	4'-1	20	5	6"	7'-2	14	5	6"	5'-2	2'-6
	4'	8"	9"	5	12"	5'-1	24	5	6"	7'-2	14	5	6"	5'-8	2'-6
	5'	8"	9"	5	12"	6'-1	24	5	6"	7'-2	14	5	6"	6'-2	2'-6
	6'	8"	9"	5	12"	7'-1	28	5	6"	7'-2	14	5	6"	6'-8	2'-6
	7'	8"	9"	5	12"	8'-1	32	5	6"	7'-2	14	5	6"	7'-2	2'-6
8'	3'	9"	11"	5	9"	4'-2	20	5	6"	9'-6	18	5	6"	5'-9	2'-10
	4'	9"	11"	5	9"	5'-2	24	5	6"	9'-6	18	5	6"	6'-3	2'-10
	5'	9½"	11"	5	10"	6'-4	24	6	7"	9'-6	18	5	6"	6'-9	2'-10
	6'	9½"	11"	5	10"	7'-4	28	6	7"	9'-6	18	5	6"	7'-3	2'-10
	7'	9½"	11"	5	10"	8'-4	32	6	7"	9'-6	18	5	6"	7'-9	2'-10
	8'	9½"	11"	5	10"	9'-4	32	6	7"	9'-6	18	5	6"	8'-3	2'-10
10'	3'	10½"	13"	5	9"	4'-4	20	6	6"	11'-10	22	6	6"	6'-6	3'-6
	4'	10½"	13"	5	9"	5'-4	24	6	6"	11'-10	22	6	6"	7'-2	3'-6
	5'	10½"	13"	5	9"	6'-4	24	6	6"	11'-10	22	6	6"	7'-8	3'-6
	6'	11"	13"	5	10"	7'-7	28	6	6"	11'-10	22	6	8"	8'-2	3'-6
	7'	11"	13"	5	10"	8'-7	32	6	6"	11'-10	22	6	8"	8'-8	3'-6
	8'	11"	13"	5	10"	9'-7	32	6	6"	11'-10	22	6	8"	9'-2	3'-6
	9'	11½"	13"	5	10"	10'-8	36	6	6"	11'-10	22	6	8"	9'-9	3'-6
	10'	11½"	13"	5	10"	11'-8	40	6	6"	11'-10	22	6	8"	10'-3	3'-6
12'	8'	13"	15"	5	10"	9'-11	32	7	6"	14'-2	26	6	7"	9'-7	3'-9
	9'	13"	15"	5	10"	10'-11	36	7	6"	14'-2	26	6	7"	10'-1	3'-9
	10'	13"	15"	5	10"	11'-11	40	7	6"	14'-2	26	6	7"	10'-7	3'-9
	11'	13"	15"	5	9"	12'-11	40	7	6"	14'-2	26	6	7"	11'-1	3'-9
	12'	13½"	15"	5	8"	14'-0	44	7	6"	14'-2	26	6	6"	11'-8	3'-9

TABLE NO. III
15'-20' FILL

Span "S"	Height "H"	Slab "T"	Walls "W"	aa Bar Size	aa Spacing	aa Length	cc Number +	ee Bar Size	ee Spacing	ee Length	gg Number +	hh Bar Size	hh Spacing	hh Length	F
6'	3'	9"	9"	5	12"	4'-3	20	6	8"	7'-2	14	5	6"	5'-2	2'-6
	4'	9"	9"	5	12"	5'-3	24	6	8"	7'-2	14	5	6"	5'-8	2'-6
	5'	9"	9"	5	12"	6'-3	24	6	8"	7'-2	14	5	6"	6'-3	2'-6
	6'	9"	9"	5	12"	7'-3	28	6	8"	7'-2	14	5	6"	6'-9	2'-6
	7'	9"	9"	5	12"	8'-3	32	6	8"	7'-2	14	5	6"	7'-3	2'-6
8'	3'	10½"	11"	5	12"	4'-4	20	6	6"	9'-6	18	5	6"	5'-7	2'-8
	4'	10½"	11"	5	12"	5'-4	24	6	6"	9'-6	18	5	6"	6'-1	2'-8
	5'	10½"	11"	5	12"	6'-6	24	6	6"	9'-6	18	5	6"	6'-8	2'-8
	6'	11"	11"	5	12"	7'-7	28	6	6"	9'-6	18	5	6"	7'-3	2'-8
	7'	11"	11"	5	12"	8'-7	32	6	6"	9'-6	18	5	6"	7'-9	2'-8
	8'	11"	11"	5	12"	9'-7	32	6	6"	9'-6	18	5	6"	8'-3	2'-8
10'	3'	12½"	13"	5	9"	4'-8	20	7	7"	11'-10	22	6	7"	6'-6	3'-4
	4'	12½"	13"	5	9"	5'-8	24	7	7"	11'-10	22	6	7"	7'-1	3'-4
	5'	12½"	13"	5	9"	6'-8	24	7	7"	11'-10	22	6	7"	7'-7	3'-4
	6'	12½"	13"	5	10"	7'-10	28	7	7"	11'-10	22	6	6"	8'-2	3'-4
	7'	12½"	13"	5	10"	8'-10	32	7	7"	11'-10	22	6	8"	8'-6	3'-4
	8'	13"	13"	5	10"	9'-11	32	7	7"	11'-10	22	6	8"	9'-1	3'-4
	9'	13"	13"	5	10"	10'-11	36	7	7"	11'-10	22	6	8"	9'-7	3'-4
	10'	13"	13"	5	10"	11'-11	40	7	7"	11'-10	22	6	8"	10'-1	3'-4
12'	8'	15"	15"	5	10"	10'-3	32	8	7"	14'-2	26	6	7"	9'-9	3'-9
	9'	15"	15"	5	10"	11'-3	36	8	7"	14'-2	26	6	7"	10'-3	3'-9
	10'	15½"	15"	5	10"	12'-4	40	8	7"	14'-2	26	6	7"	10'-10	3'-9
	11'	15½"	15"	5	9"	13'-4	40	8	7"	14'-2	26	6	6"	11'-4	3'-9
	12'	15½"	15"	5	8"	14'-4	44	8	7"	14'-2	26	6	6"	11'-10	3'-9

TABLE NO. IV
20'-25' FILL

Span "S"	Height "H"	Slab "T"	Walls "W"	aa Bar Size	aa Spacing	aa Length	cc Number +	ee Bar Size	ee Spacing	ee Length	gg Number +	hh Bar Size	hh Spacing	hh Length	F
6'	3'	10"	9"	5	12"	4'-3	20	6	8"	7'-2	14	5	6"	5'-3	2'-6
	4'	10"	9"	5	12"	5'-3	24	6	8"	7'-2	14	5	6"	5'-9	2'-6
	5'	10"	9"	5	12"	6'-5	24	6	8"	7'-2	14	5	6"	6'-4	2'-6
	6'	10"	9"	5	12"	7'-5	28	6	8"	7'-2	14	5	6"	6'-10	2'-6
	7'	10"	9"	5	12"	8'-5	32	6	8"	7'-2	14	5	6"	7'-4	2'-6
8'	3'	12"	11"	5	12"	4'-7	20	7	7"	9'-6	18	5	6"	5'-9	2'-8
	4'	12"	11"	5	12"	5'-7	24	7	7"	9'-6	18	5	6"	6'-1	2'-8
	5'	12"	11"	5	12"	6'-9	24	7	7"	9'-6	18	5	6"	6'-8	2'-8
	6'	12"	11"	5	12"	7'-9	28	7	7"	9'-6	18	5	6"	7'-3	2'-8
	7'	12"	11"	5	12"	8'-9	32	7	7"	9'-6	18	5	6"	7'-9	2'-8
	8'	12½"	11"	5	12"	9'-10	32	7	7"	9'-6	18	5	6"	8'-3	2'-8
10'	3'	14"	13"	5	6"	4'-11	20	8	8"	11'-10	22	6	6"	6'-6	3'-2
	4'	14"	13"	5	9"	5'-11	24	8	8"	11'-10	22	6	6"	7'-0	3'-2
	5'	14"	13"	5	10"	6'-11	24	8	7"	11'-10	22	6	6"	7'-6	3'-2
	6'	14½"	13"	5	10"	8'-2	28	8	7"	11'-10	22	6	8"	8'-2	3'-2
	7'	14½"	13"	5	10"	9'-2	32	8	7"	11'-10	22	6	8"	8'-6	3'-2
	8'	14½"	13"	5	10"	10'-2	32	8	7"	11'-10	22	6	8"	9'-0	3'-2
	9'	14½"	13"	5	10"	11'-2	36	8	7"	11'-10	22	6	8"	9'-6	3'-2
	10'	15"	13"	5	10"	12'-2	40	8	7"	11'-10	22	6	7"	10'-0	3'-2
12'	8'	17"	15"	5	10"	10'-7	32	8	6"	14'-2	26	6	7"	9'-10	3'-9
	9'	17½"	15"	5	10"	11'-8	36	9	7"	14'-2	26	6	7"	10'-6	3'-9
	10'	17½"	15"	5	10"	12'-8	40	9	7"	14'-2	26	6	7"	10'-10	3'-9
	11'	17½"	15"	5	9"	13'-8	40	9	7"	14'-2	26	6	7"	11'-7	3'-9
	12'	17½"	15"	5	7"	14'-8	44	9	7"	14'-2	26	6	6"	12'-1	3'-9

TABLE NO. V
25'-30' FILL

Span "S"	Height "H"	Slab "T"	Walls "W"	aa Bar size	aa Spacing	aa Length	cc Number +	ee Bar size	ee Spacing	ee Length	gg Number +	hh Bar Size	hh Spacing	hh Length	F
6'	3'	10½"	9"	5	12"	4'-5	20	6	7"	7'-2	14	5	6"	5'-4	2'-6
	4'	11"	9"	5	12"	5'-6	24	6	7"	7'-2	14	5	6"	5'-11	2'-6
	5'	11"	9"	5	12"	6'-7	24	6	7"	7'-2	14	5	6"	6'-5	2'-6
	6'	11"	9"	5	12"	7'-7	28	6	7"	7'-2	14	5	6"	6'-11	2'-6
	7'	11"	9"	5	12"	8'-7	32	6	7"	7'-2	14	5	6"	7'-5	2'-6
8'	3'	13"	11"	5	10"	4'-10	20	7	7"	9'-6	18	5	6"	5'-10	2'-8
	4'	13"	11"	5	10"	5'-10	24	7	7"	9'-6	18	5	6"	6'-4	2'-8
	5'	13½"	11"	5	10"	7'-0	24	7	7"	9'-6	18	5	8"	6'-11	2'-8
	6'	13½"	11"	5	10"	8'-0	28	7	7"	9'-6	18	5	8"	7'-5	2'-8
	7'	13½"	11"	5	10"	9'-0	32	7	7"	9'-6	18	5	8"	7'-11	2'-8
	8'	13½"	11"	5	10"	10'-0	32	7	7"	9'-6	18	5	8"	8'-5	2'-8
10'	3'	16"	13"	5	6"	5'-4	20	8	7"	11'-10	22	6	6"	6'-9	3'-4
	4'	16"	13"	5	6"	6'-4	24	8	7"	11'-10	22	6	6"	7'-6	3'-4
	5'	16"	13"	5	8"	7'-4	24	8	7"	11'-10	22	6	8"	8'-0	3'-4
	6'	16"	13"	5	10"	8'-5	28	8	7"	11'-10	22	6	8"	8'-5	3'-4
	7'	16"	13"	5	10"	9'-5	32	8	7"	11'-10	22	6	8"	8'-10	3'-4
	8'	16"	13"	5	10"	10'-5	32	8	7"	11'-10	22	6	8"	9'-4	3'-4
	9'	16"	13"	5	10"	11'-5	36	8	7"	11'-10	22	6	8"	9'-10	3'-4
	10'	16½"	13"	5	10"	12'-6	40	8	7"	11'-10	22	6	7"	10'-4	3'-4
12'	8'	19½"	15"	5	10"	11'-0	32	9	7"	14'-2	26	6	7"	10'-0	3'-9
	9'	19½"	15"	5	10"	12'-0	36	9	7"	14'-2	26	6	7"	10'-6	3'-9
	10'	19½"	15"	5	10"	13'-0	40	9	7"	14'-2	26	6	7"	10'-11	3'-9
	11'	19½"	15"	5	8"	14'-0	40	9	7"	14'-2	26	6	7"	11'-8	3'-9
	12'	20"	15"	5	6"	15'-1	44	9	7"	14'-2	26	6	6"	12'-1	3'-9

QUANTITIES PER LINEAR FOOT OF BARREL

Span "S"	Height "H"	Table I Concrete C.Y.	Table I Reinf. Steel Lbs.	Table II Concrete C.Y.	Table II Reinf. Steel Lbs.	Table III Concrete C.Y.	Table III Reinf. Steel Lbs.	Table IV Concrete C.Y.	Table IV Reinf. Steel Lbs.	Table V Concrete C.Y.	Table V Reinf. Steel Lbs.
6'	3'	0.662	83.9	0.593	109.1	0.639	111.8	0.685	112.5	0.708	118.2
	4'	0.718	95.3	0.648	118.0	0.694	120.8	0.741	121.5	0.787	128.0
	5'	0.773	109.7	0.704	124.3	0.750	127.7	0.796	128.7	0.843	134.4
	6'	0.829	118.5	0.759	133.2	0.806	136.6	0.852	137.7	0.898	143.3
	7'	0.884	125.9	0.815	142.1	0.861	145.6	0.907	146.6	0.954	152.3
8'	3'	0.881	112.7	0.820	131.1	0.911	144.9	1.002	156.3	1.063	159.6
	4'	0.949	121.5	0.888	140.7	0.979	153.9	1.070	163.9	1.131	168.9
	5'	1.016	126.2	0.986	155.7	1.047	161.2	1.138	171.2	1.229	162.3
	6'	1.084	133.7	1.054	165.0	1.145	171.0	1.206	180.8	1.297	170.6
	7'	1.152	145.6	1.122	174.4	1.213	179.9	1.274	189.7	1.365	178.9
	8'	1.220	150.4	1.190	181.0	1.281	186.2	1.372	196.2	1.433	184.5
10'	3'	1.076	157.6	1.114	196.8	1.264	186.9	1.377	249.7	1.527	242.0
	4'	1.156	166.6	1.194	210.3	1.344	210.2	1.457	248.3	1.607	263.4
	5'	1.237	181.7	1.274	219.1	1.424	218.1	1.537	262.7	1.687	241.9
	6'	1.317	190.7	1.392	206.4	1.505	227.9	1.655	268.5	1.767	246.5
	7'	1.397	200.9	1.472	214.3	1.585	225.5	1.735	252.1	1.848	255.4
	8'	1.477	211.1	1.552	221.3	1.703	233.5	1.815	259.1	1.928	262.4
	9'	1.558	221.8	1.670	231.9	1.783	243.2	1.896	268.8	2.008	272.1
	10'	1.675	231.4	1.751	241.6	1.863	252.9	2.013	291.3	2.126	295.3
12'	8'	1.869	305.6	2.003	287.4	2.182	303.8	2.361	327.1	2.585	343.7
	9'	1.961	317.0	2.096	297.8	2.275	314.1	2.498	353.2	2.677	354.0
	10'	2.054	333.9	2.188	308.1	2.412	325.5	2.591	361.8	2.770	363.5
	11'	2.191	344.6	2.281	319.3	2.505	356.4	2.684	375.8	2.863	382.5
	12'	2.284	375.7	2.418	355.9	2.597	372.8	2.776	418.9	3.000	429.3

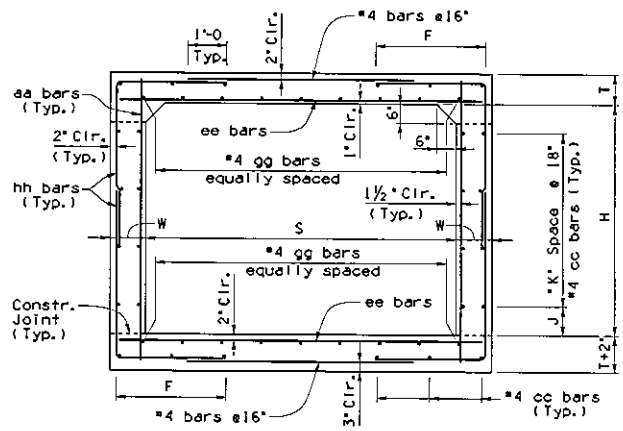

TYPICAL SECTION
(Shown as 8'-0 x 6'-0 Table II)

Height "H"	"J" Dim.	"K" Spaces
3'	9"	1
4'	6"	2
5'	12"	2
6'	9"	3
7'	6"	4
8'	12"	4
9'	9"	5
10'	6"	6
11'	12"	6
12'	9"	7

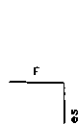

BENDS

NOTE:

Reinforcing shown for 8'-0 x 6'-0 Table II box. Use the appropriate table to determine the reinforcing requirements of selected box.

NOTE:

For General Notes, Dimensions, and additional Details, see SD 6.01 (1 to 4).

New box culverts shall not be constructed using 3' or 4' heights without special approval from ADOT Bridge Group. Tables referencing these sizes are provided for extension of existing box culverts only.

Note to Designer:
The information presented in this Standard Detail has been prepared in accordance with recognized engineering principles and is for general use. It should not be used for specific application without competent professional examination and verification of its suitability and applicability by a licensed professional engineer. Contents within the inner border line shall not be altered.

NO	DESCRIPTION OF REVISIONS	MADE BY	DATE
1	Original Issue	SAM	2-92
2	Added 5'-6" height for existing box extensions only.	D.A.B.	5-96
3			
4			

DESIGN APPROVED: Carmen Arman
APPROVED FOR DISTRIBUTION: [signature]

ARIZONA DEPARTMENT OF TRANSPORTATION
INFRASTRUCTURE DELIVERY AND OPERATIONS DIVISION
BRIDGE GROUP STRUCTURE DETAIL

REINFORCED CONCRETE BOX CULVERTS
SINGLE BARREL
(0' - 30' FILLS)

FOLDER | PROJECT NO. | F.A. NO. | DRAWING NO. SD 6.01 (5 of 5)
LOCATION | SHEET NO. OF

20-JAN-2016 16:36 G:\Bridge\CADD\Standards\SD_Sheets\SD 6 Drainage Structures\SD 6.01-6.11 Series\SD6.01-1 to 5\sd601-5_1918.dgn

	Inlet End			Outlet End		
Skew ∡	15°	30°	45°	15°	30°	45°
θ_1	75°	90°	90°	85°	90°	90°
θ_2	45°	40°	25°	55°	40°	25°

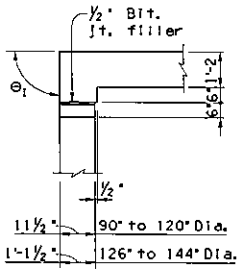

DETAIL B

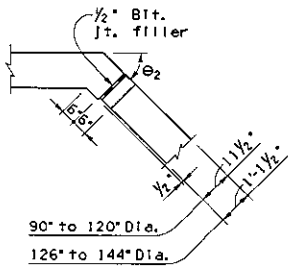

DETAIL C

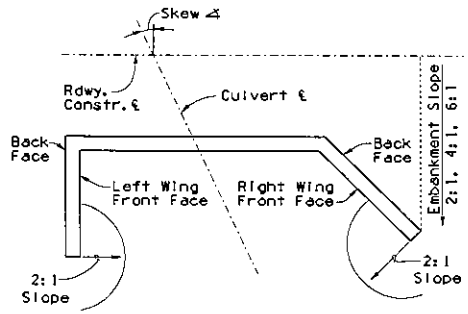

FILL PLACEMENT DETAIL

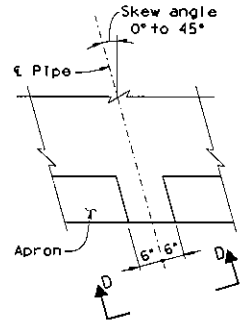

PLAN AT APRON DRAIN

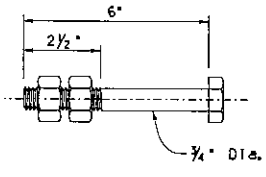

ANCHOR BOLT DETAIL

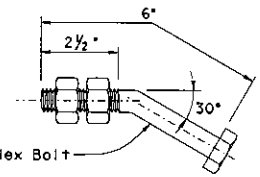

ALTERNATE ANCHOR BOLT DETAIL

NOTE:

When straight anchor bolt will not fit in headwall use alternate anchor bolt.

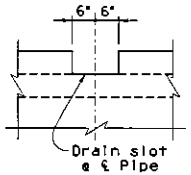

ELEVATION D-D

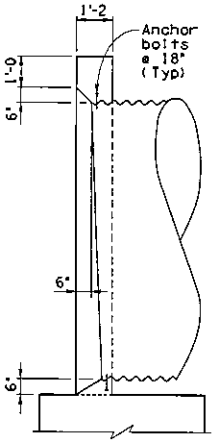

Outlet End

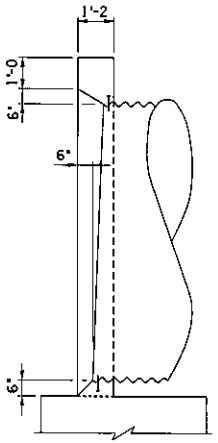

Inlet End

DETAIL D

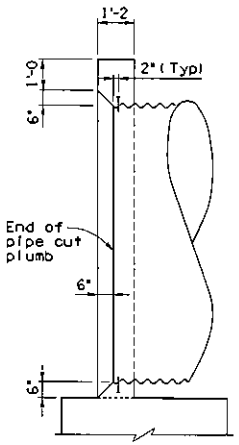

Outlet or Inlet End

DETAIL E

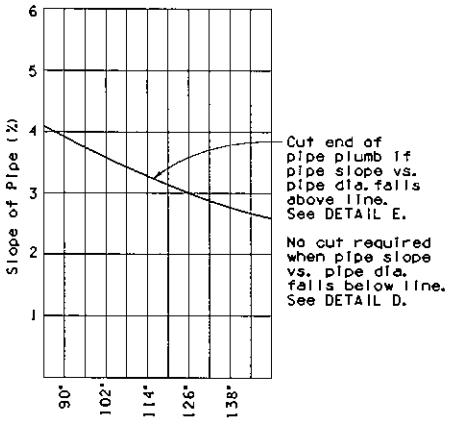

PIPE DIAMETER CHART

(Use to determine pipe end treatment)

NOTE:

Headwall details shown on this sheet are for pipes 90" in diameter or greater.

GENERAL NOTES:

Construction Specification - Arizona Department of Transportation Standard Specifications for Road and Bridge Construction, latest Edition.

Design Specifications - AASHTO LRFD Bridge Design Specifications, 6th Edition 2012.

Loading Class - HL-93.

Design Soil weight = 120 p.c.f.

All Concrete shall be Class "S" (f'c = 3000 psi).

Reinforcing steel shall conform to ASTM Specification A615. All reinforcing shall be furnished as Grade 60.

All bends and hooks shall meet the requirements of AASHTO LRFD Article 5.10. All bend dimensions for reinforcing steel shall be out-to-out of bars. All placement dimensions for reinforcing steel shall be to center of bars unless noted otherwise.

All reinforcing steel shall have 2 inch clear cover unless noted otherwise.

Chamfer all exposed corners ¾" unless noted otherwise.

Bolt material shall conform to ASTM A307. Bolts shall be galvanized to conform to ASTM A153.

Disturbed area of pipe shall be treated in accordance with Standard Specifications requirements when end of pipe is cut to fit skew or slope.

Compact backfill for footing and wing base minimum 95 percent of ASTM D698 maximum dry density.

See Project Plans for culvert layout, invert elevations, finished grade elevations, headwall, apron, and other site specific details. Headwall Quantity Tables are approximate and for information purpose only.

Dimensions shall not be scaled from drawings.

NOTE:

For Dimensions, Quantities and additional Details, see SD 6.30 (2 to 5).

Note to Designer:
The information presented in this Standard Detail has been prepared in accordance with recognized engineering principles and is for general use. It should not be used for specific application without competent professional examination and verification of its suitability and applicability by a licensed professional engineer. Contents within the inner border line shall not be altered.

NO.	DESCRIPTION OF REVISIONS	MADE BY	DATE
1	Original Issue	Sadik	T.H.Z.

DESIGN APPROVED: Shafi U. Haque

APPROVED FOR DISTRIBUTION: Tean A. Nehme

ARIZONA DEPARTMENT OF TRANSPORTATION
INFRASTRUCTURE DELIVERY AND OPERATIONS DIVISION
BRIDGE GROUP STRUCTURE DETAIL

PIPE CULVERT HEADWALLS
MISCELLANEOUS DETAILS

ROUTE | PROJECT NO. | F.A. NO. | DRAWING NO. SD 6.30 (1 of 5)

LOCATION | SHEET NO. OF

21-JAN-2016 13:53 G:\Bridge\CADD\Standards\SD_Sheets\SD 6 Drainage Structures\SD 6.30 Series\SD630-1 to 5\sd630-1_1916.dgn

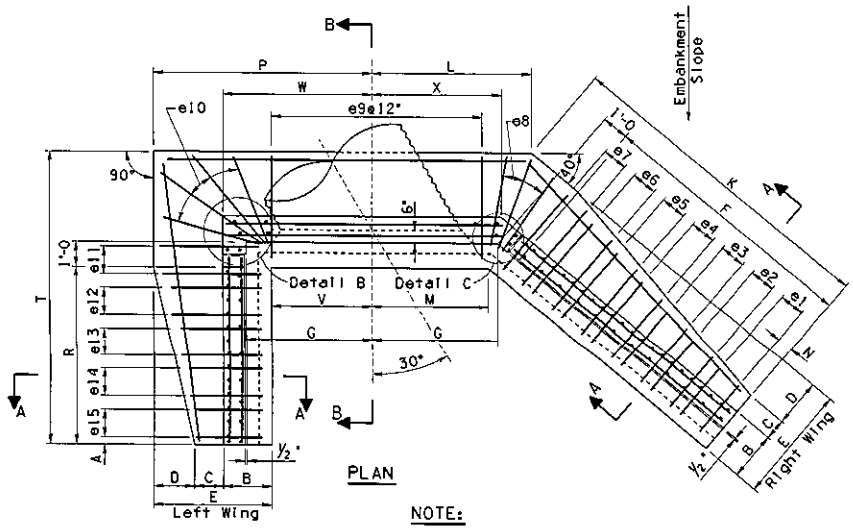

PLAN

NOTE:
See SD 6.30 (1 of 5) for Detail B and Detail C.

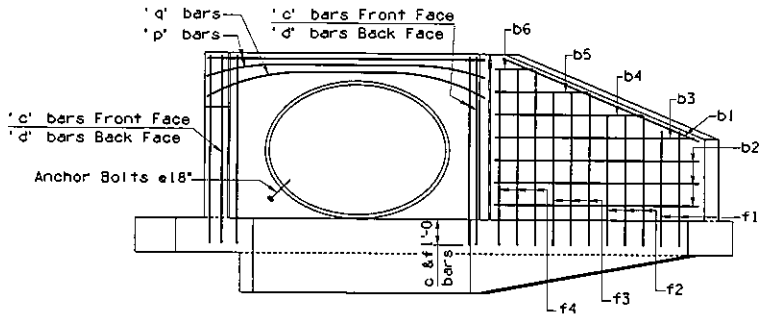

ELEVATION

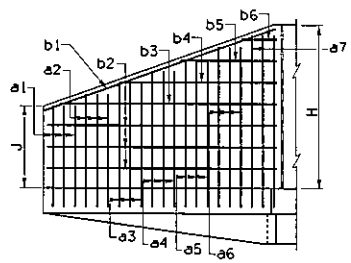

RIGHT WING ELEVATION
(Back Face)

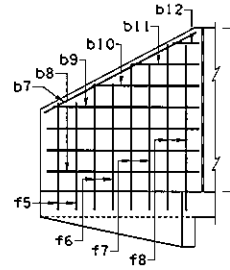

LEFT WING ELEVATION
(Front Face)

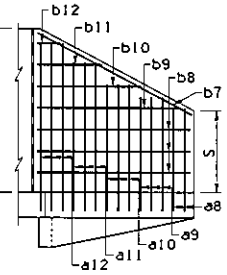

LEFT WING ELEVATION
(Back Face)

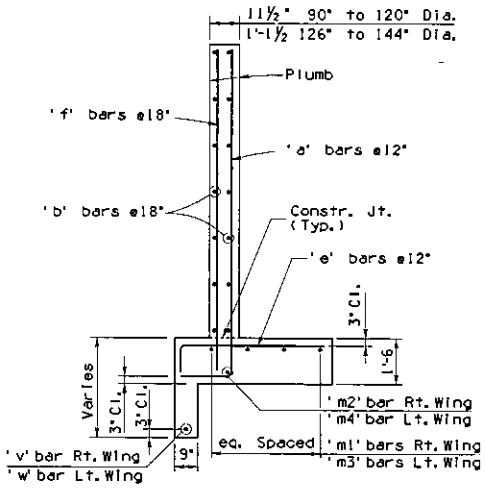

SECTION A-A

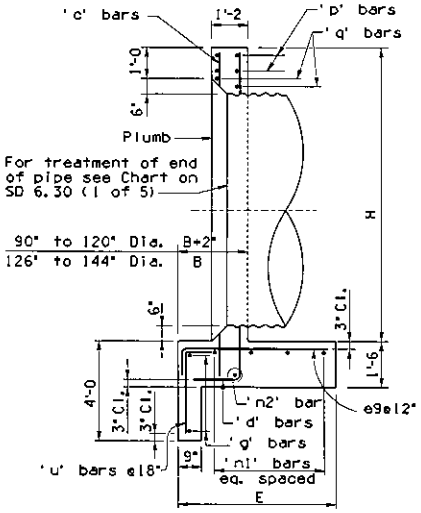

SECTION B-B

NOTE:
For General Notes and additional Details, see SD 6.30 (1 of 5) For steel list and bend diagrams see SD 6.33 (2 to 4).

DESIGN APPROVED: Shafi U. Hasan	ARIZONA DEPARTMENT OF TRANSPORTATION INFRASTRUCTURE DELIVERY AND OPERATIONS DIVISION BRIDGE GROUP STRUCTURE DETAIL
APPROVED FOR DISTRIBUTION: Jean A. Nehme	PIPE CULVERT HEADWALLS 30° SKEW INLET
ROUTE / PROJECT NO. / F.A. NO. / LOCATION	DRAWING NO. SD 6.33 (1 of 8) / SHEET NO. OF

Note to Designers:
The information presented in this Standard Detail has been prepared in accordance with recognized engineering principles and is for general use. It should not be used for specific application without competent professional examination and verification of its suitability and applicability by a licensed professional engineer. Contents within the inner border line shall not be altered.

NO	DESCRIPTION OF REVISION	BY	DATE
1	Original Issue	SJAK	8-12
2			
3			
4			

22-JAN-2016 12:43 G:\Bridge\CADD\Standards\SD_Sheets\SD 6 Drainage Stuctures\SD 6.30 Series\SD633-1 to 8\sd633-1_0116.dgn

STEEL LIST

Mark	Bend	90° Dia.			96° Dia.			102° Dia.			108° Dia.			114° Dia.			120° Dia.			126° Dia.			132° Dia.			138° Dia.			144° Dia.		
		No	Size	Lgth	No	Size	Lgth	No	Size	Lgth	No	Size	Lgth	No	Size	Lgth	No	Size	Lgth	No	Size	Lgth	No	Size	Lgth	No	Size	Lgth	No	Size	Lgth
a1	A	4	#5	7'-9	4	#5	8'-3	5	#5	8'-6	5	#5	8'-9	5	#5	9'-3	5	#5	9'-9	5	#5	10'-0	5	#5	10'-3	5	#5	10'-9	6	#5	11'-3
a2	A	4	#5	8'-6	4	#5	9'-0	4	#5	9'-3	5	#5	9'-6	5	#5	10'-0	5	#5	10'-6	5	#5	10'-9	5	#5	11'-3	5	#6	11'-6	5	#6	12'-0
a3	A	4	#5	9'-3	4	#5	9'-6	4	#5	10'-0	4	#5	10'-3	5	#5	11'-0	5	#6	11'-3	5	#6	11'-6	5	#6	12'-0	5	#6	12'-6	5	#7	13'-0
a4	A	4	#5	10'-0	4	#5	10'-3	4	#5	10'-6	4	#5	11'-0	4	#6	11'-9	5	#6	12'-0	5	#7	12'-6	5	#7	12'-9	5	#7	13'-3	5	#7	13'-9
a5	A	4	#5	10'-9	4	#5	11'-0	4	#6	11'-3	4	#6	11'-9	4	#7	12'-6	4	#7	13'-0	5	#7	13'-3	5	#7	13'-9	5	#7	14'-3	5	#8	14'-9
a6	A	4	#5	11'-6	4	#6	11'-9	4	#6	12'-0	4	#7	12'-6	4	#7	13'-6	4	#7	13'-9	4	#7	14'-3	5	#8	14'-6	5	#8	15'-0	5	#8	15'-6
a7	A	3	#6	12'-3	4	#6	12'-6	4	#7	12'-9	4	#7	13'-3	4	#7	14'-3	4	#7	14'-6	4	#8	15'-0	4	#8	15'-6	5	#8	16'-0	5	#8	16'-6
a8	A	4	#5	8'-0	4	#5	8'-3	4	#5	8'-6	4	#5	8'-9	5	#5	9'-3	5	#5	9'-6	5	#5	9'-9	5	#5	10'-0	5	#5	10'-6	6	#5	10'-9
a9	A	4	#5	9'-0	4	#5	9'-3	4	#5	9'-6	4	#5	9'-9	4	#5	10'-6	5	#5	10'-9	5	#5	11'-0	5	#6	11'-3	5	#6	11'-9	5	#6	12'-3
a10	A	3	#5	10'-0	4	#5	10'-3	4	#5	10'-9	4	#5	11'-0	4	#6	11'-6	4	#6	12'-0	5	#6	12'-3	5	#7	12'-6	5	#7	13'-0	5	#7	13'-9
a11	A	3	#5	11'-0	3	#6	11'-6	4	#6	11'-9	4	#6	12'-3	4	#7	12'-9	4	#7	13'-3	4	#7	13'-6	5	#7	14'-0	5	#7	14'-6	5	#8	15'-0
a12	A	3	#6	11'-9	3	#6	12'-6	3	#7	12'-9	4	#7	13'-3	4	#7	14'-0	4	#7	14'-6	4	#7	14'-9	4	#7	15'-3	5	#8	15'-9	5	#8	16'-6
b1	str	2	#4	26'-6	2	#4	27'-6	2	#4	28'-6	2	#4	29'-6	2	#4	30'-6	2	#4	31'-6	2	#4	32'-6	2	#4	33'-6	2	#4	34'-6	2	#4	35'-6
b2	str	6	#4	26'-0	6	#4	27'-0	8	#4	28'-0	8	#4	29'-0	8	#4	30'-0	8	#4	31'-0	10	#4	32'-0	10	#4	33'-0	10	#4	34'-0	10	#4	35'-0
b3	str	2	#4	23'-6	2	#4	26'-0	2	#4	20'-6	2	#4	24'-0	2	#4	25'-6	2	#4	29'-0	2	#4	23'-6	2	#4	26'-6	2	#4	29'-6	2	#4	32'-0
b4	str	2	#4	14'-6	2	#4	17'-3	2	#4	11'-6	2	#4	15'-3	2	#4	17'-0	2	#4	20'-3	2	#4	14'-6	2	#4	17'-6	2	#4	20'-6	2	#4	23'-3
b5	str	2	#4	5'-6	2	#4	8'-6	2	#4	3'-0	2	#4	6'-6	2	#4	8'-6	2	#4	11'-3	2	#4	5'-6	2	#4	8'-6	2	#4	11'-6	2	#4	14'-9
b6	str																2	#4	2'-6							2	#4	2'-6	2	#4	6'-0
b7	str	2	#4	16'-6	2	#4	17'-6	2	#4	18'-6	2	#4	19'-6	2	#4	20'-6	2	#4	21'-6	2	#4	22'-6	2	#4	23'-6	2	#4	24'-6	2	#4	25'-6
b8	str	6	#4	16'-0	8	#4	17'-0	8	#4	18'-0	8	#4	19'-0	8	#4	20'-0	8	#4	21'-0	8	#4	22'-0	8	#4	23'-0	10	#4	24'-0	10	#4	25'-0
b9	str	2	#4	14'-9	2	#4	11'-6	2	#4	13'-0	2	#4	15'-6	2	#4	17'-3	2	#4	19'-6	2	#4	20'-6	2	#4	22'-6	2	#4	19'-0	2	#4	21'-6
b10	str	2	#4	9'-0	2	#4	5'-6	2	#4	7'-6	2	#4	10'-0	2	#4	11'-3	2	#4	13'-6	2	#4	14'-9	2	#4	16'-9	2	#4	13'-3	2	#4	15'-9
b11	str	2	#4	3'-6				2	#4	2'-0	2	#4	4'-6	2	#4	5'-6	2	#4	7'-6	2	#4	9'-3	2	#4	11'-0	2	#4	7'-9	2	#4	10'-0
b12	str																2	#4	2'-0	2	#4	3'-6	2	#4	5'-3	2	#4	2'-0	2	#4	4'-3
c	str	5	#4	10'-6	5	#4	11'-0	5	#4	11'-6	5	#4	12'-0	5	#4	12'-6	5	#4	13'-0	5	#4	13'-6	5	#4	14'-0	5	#4	14'-6	5	#4	15'-0
d	A	6	#6	12'-3	6	#6	12'-9	6	#7	13'-3	6	#7	13'-9	6	#7	14'-6	6	#7	15'-0	6	#8	15'-6	6	#8	16'-0	6	#8	16'-6	6	#8	17'-0
e1	C	4	#5	3'-6	4	#5	3'-9	5	#5	3'-9	5	#5	4'-0	5	#5	4'-0	5	#5	4'-3	5	#5	4'-3	5	#5	4'-6	5	#5	4'-6	5	#5	4'-9
e2	C	4	#5	3'-9	4	#5	4'-0	4	#5	4'-0	5	#5	4'-6	5	#5	4'-6	5	#5	4'-9	5	#5	4'-9	5	#5	5'-0	5	#6	5'-0	5	#6	5'-3
e3	C	4	#5	4'-3	4	#5	4'-6	4	#5	4'-6	4	#5	4'-9	4	#5	5'-0	5	#5	5'-3	5	#6	5'-3	5	#6	5'-6	5	#6	5'-6	5	#6	5'-9
e4	C	4	#5	4'-6	4	#5	4'-9	4	#5	5'-0	4	#5	5'-3	4	#5	5'-3	4	#6	5'-6	5	#6	5'-9	5	#6	6'-0	5	#7	7'-0	5	#7	7'-6
e5	C	4	#5	4'-9	4	#5	5'-0	4	#5	5'-3	4	#5	5'-6	4	#6	5'-9	4	#6	6'-0	4	#7	7'-6	5	#7	7'-6	5	#7	7'-9	5	#7	8'-0
e6	C	4	#5	5'-3	4	#5	5'-6	4	#5	5'-9	4	#6	6'-0	4	#6	6'-3	4	#7	7'-6	4	#7	7'-9	4	#7	8'-0	5	#7	8'-3	5	#8	8'-6
e7	C	3	#5	5'-6	4	#6	5'-9	4	#6	6'-0	4	#6	6'-6	4	#7	7'-9	4	#7	8'-0	4	#7	8'-3	4	#7	8'-6	4	#8	9'-0	5	#8	9'-3
e8	C	2	#5	5'-9	2	#6	6'-0	2	#6	6'-3	2	#6	6'-9	3	#7	8'-0	3	#7	8'-3	3	#7	8'-9	3	#7	9'-0	3	#8	9'-6	3	#8	9'-9
e9	C	9	#5	5'-9	10	#6	6'-0	10	#6	6'-3	11	#6	6'-9	11	#7	8'-0	12	#7	8'-3	12	#7	8'-9	13	#7	9'-0	13	#8	9'-6	14	#8	9'-9
e10	C	5	#5	5'-9	5	#6	6'-0	5	#6	6'-3	6	#6	6'-9	6	#7	8'-0	6	#7	8'-3	6	#7	8'-9	7	#7	9'-0	7	#8	9'-6	7	#8	9'-9
e11	C	4	#5	5'-6	4	#6	5'-9	4	#6	6'-0	4	#6	6'-6	4	#6	6'-9	5	#7	7'-9	5	#7	8'-0	5	#7	8'-3	5	#7	8'-6	5	#7	9'-0
e12	C	3	#5	5'-0	4	#5	5'-3	4	#5	5'-6	4	#5	5'-9	4	#5	6'-0	4	#6	6'-3	5	#6	6'-6	5	#6	6'-6	5	#7	7'-9	5	#7	8'-0
e13	C	3	#5	4'-6	3	#5	4'-9	4	#5	4'-9	4	#5	5'-3	4	#5	5'-3	4	#5	5'-6	4	#5	5'-9	5	#5	6'-0	5	#6	6'-0	5	#6	6'-3
e14	C	3	#5	4'-0	3	#5	4'-3	3	#5	4'-3	4	#5	4'-6	4	#5	4'-6	4	#5	4'-9	4	#5	5'-0	4	#5	5'-3	5	#5	5'-3	5	#5	5'-6
e15	C	3	#5	3'-6	3	#5	3'-9	3	#5	3'-9	3	#5	4'-0	4	#5	4'-0	4	#5	4'-3	4	#5	4'-3	4	#5	4'-6	4	#5	4'-6	5	#5	4'-9
f1	str	5	#4	6'-3	5	#4	6'-6	5	#4	6'-9	5	#4	7'-0	5	#4	7'-6	6	#4	7'-9	6	#4	8'-0	6	#4	8'-6	6	#4	8'-9	6	#4	9'-0
f2	str	5	#4	7'-6	5	#4	7'-9	5	#4	8'-0	5	#4	8'-3	5	#4	8'-9	5	#4	9'-3	6	#4	9'-6	6	#4	10'-0	6	#4	10'-3	6	#4	10'-6
f3	str	4	#4	8'-9	4	#4	9'-0	5	#4	9'-3	5	#4	9'-9	5	#4	10'-3	5	#4	10'-6	5	#4	11'-0	5	#4	11'-6	6	#4	12'-0	6	#4	12'-3
f4	str	4	#4	9'-9	4	#4	10'-3	4	#4	10'-6	5	#4	11'-0	5	#4	11'-6	5	#4	12'-0	5	#4	12'-6	5	#4	13'-0	5	#4	13'-6	6	#4	13'-9
f5	str	3	#4	6'-6	3	#4	6'-9	3	#4	7'-0	4	#4	7'-3	4	#4	7'-6	4	#4	7'-9	4	#4	8'-0	4	#4	8'-3	4	#4	8'-6	5	#4	8'-9
f6	str	3	#4	7'-9	3	#4	8'-0	3	#4	8'-3	3	#4	8'-6	4	#4	9'-0	4	#4	9'-3	4	#4	9'-6	4	#4	9'-9	4	#4	10'-0	4	#4	10'-6
f7	str	3	#4	8'-9	3	#4	9'-0	3	#4	9'-6	3	#4	10'-0	3	#4	10'-3	3	#4	10'-6	4	#4	11'-3	4	#4	11'-6	4	#4	11'-9	4	#4	12'-3
f8	str	2	#4	10'-0	3	#4	10'-3	3	#4	10'-9	3	#4	11'-3	3	#4	11'-9	3	#4	12'-0	3	#4	12'-9	4	#4	13'-0	4	#4	13'-3	4	#4	14'-0
g	str	2	#4	10'-0	2	#4	10'-6	2	#4	11'-0	2	#4	11'-6	2	#4	12'-0	2	#4	12'-6	2	#4	13'-0	2	#4	13'-6	2	#4	14'-3	2	#4	14'-9
m1	str	4	#4	28'-6	4	#4	29'-9	4	#4	30'-9	5	#4	31'-9	5	#4	33'-0	5	#4	34'-0	5	#4	35'-0	6	#4	36'-3	6	#4	37'-3	6	#4	38'-6
m2	str	1	#4	28'-6	1	#4	29'-9	1	#4	30'-9	1	#4	31'-9	1	#4	33'-0	1	#4	34'-0	1	#4	35'-0	1	#4	36'-3	1	#4	37'-3	1	#4	38'-6
m3	str	4	#4	21'-9	4	#4	23'-0	4	#4	24'-3	5	#4	25'-6	5	#4	26'-9	5	#4	28'-0	5	#4	29'-6	6	#4	30'-9	6	#4	32'-0	6	#4	33'-3
m4	str	1	#4	21'-9	1	#4	23'-0	1	#4	24'-3	1	#4	25'-6	1	#4	26'-9	1	#4	28'-0	1	#4	29'-6	1	#4	30'-9	1	#4	32'-0	1	#4	33'-3
n1	str	4	#4	17'-6	4	#4	18'-6	4	#4	19'-3	5	#4	20'-3	5	#4	21'-0	5	#4	22'-0	5	#4	23'-3	6	#4	24'-0	6	#4	25'-0	6	#4	26'-0
n2	str	1	#4	17'-6	1	#4	18'-6	1	#4	19'-3	1	#4	20'-3	1	#4	21'-0	1	#4	22'-0	1	#4	23'-3	1	#4	24'-0	1	#4	25'-0	1	#4	26'-0
p	str	4	#5	12'-0	4	#5	12'-6	4	#5	13'-0	4	#5	13'-9	4	#5	14'-3	4	#5	15'-0	4	#5	15'-6	4	#5	16'-3	4	#5	17'-0	4	#5	17'-6
q	str	2	#6	14'-0	2	#6	14'-6	2	#6	15'-0	2	#6	15'-9	2	#6	16'-3	2	#6	17'-0	2	#6	17'-6	2	#6	18'-3	2	#6	19'-0	2	#6	19'-6
u	B	7	#4	5'-0	7	#4	5'-0	8	#4	5'-0	8	#4	5'-0	8	#4	5'-0	9	#4	5'-0	9	#4	5'-0	10	#4	5'-0	10	#4	5'-0	10	#4	5'-0
v	str	1	#4	26'-6	1	#4	27'-6	1	#4	28'-6	1	#4	29'-6	1	#4	30'-6	1	#4	31'-6	1	#4	32'-6	1	#4	33'-6	1	#4	34'-6	1	#4	35'-6
w	str	1	#4	15'-6	1	#4	16'-6	1	#4	17'-6	1	#4	18'-6	1	#4	19'-6	1	#4	20'-6	1	#4	21'-6	1	#4	22'-6	1	#4	23'-6	1	#4	24'-6

PIPE DIAMETER

	90"	96"	102"	108"	114"	120"	126"	132"	138"	144"
A	0'- 3	0'- 3	0'- 3	0'- 3	0'- 3	0'- 3	0'- 3	0'- 3	0'- 3	0'- 3
B	2'- 2	2'- 2	2'- 3	2'- 3	2'- 4	2'- 4	2'- 5	2'- 5	2'- 6	2'- 6
C	1'- 9	1'-10	1'-11	2'- 0	2'- 1	2'- 2	2'- 3	2'- 4	2'- 5	2'- 6
D	2'- 4	2'- 6	2'- 8	2'-10	3'- 0	3'- 2	3'- 4	3'- 6	3'- 8	3'-10
E	6'- 3	6'- 6	6'-10	7'- 1	7'- 5	7'- 8	8'- 0	8'- 3	8'- 7	8'-10
F	26'- 0	27'- 0	28'- 0	29'- 0	30'- 0	31'- 0	32'- 0	33'- 0	34'- 0	35'- 0
G	5'- 6	5'- 9⅜	6'- 0⅞	6'- 4⅜	6'- 7⅞	6'-11¼	7'- 2¾	7'- 6¼	7'- 9⅝	8'- 1⅞
H	9'- 6	10'- 0	10'- 6	11'- 0	11'- 6	12'- 0	12'- 6	13'- 0	13'- 6	14'- 0
J	5'- 0	5'- 4	5'- 8	6'- 0	6'- 4	6'- 8	7'- 0	7'- 4	7'- 8	8'- 0
K	28'-10¼	29'-11¼	31'- 0⅜	32'- 1½	33'- 2⅝	34'- 3⅝	35'- 5½	36'- 6⅝	37'- 7⅝	38'- 8¾
L	7'- 4⅛	7'- 8¾	8'- 1¼	8'- 5⅞	8'-10⅜	9'- 3	9'- 8¼	10'- 0¾	10'- 5⅜	10'- 9⅞
M	5'- 0⅞	5'- 4⅜	5'- 7⅞	5'-10⅞	6'- 2	6'- 5½	6'- 9¼	7'- 0¾	7'- 3⅞	7'- 7⅜
N	0'- 3	0'- 3	0'- 3	0'- 3	0'- 3	0'- 3	0'- 3	0'- 3	0'- 3	0'- 3
P	10'- 7	11'- 1⅜	11'- 7⅞	12'- 2⅜	12'- 8⅞	13'- 3¼	13'-11¾	14'- 6¼	15'- 0⅝	15'- 7⅛
R	16'- 0	17'- 0	18'- 0	19'- 0	20'- 0	21'- 0	22'- 0	23'- 0	24'- 0	25'- 0
S	5'- 3	5'- 6	5'- 9	6'- 0	6'- 3	6'- 6	6'- 9	7'- 0	7'- 3	7'- 6
T	22'- 1	23'- 4	24'- 7	25'-10	27'- 1	28'- 4	29'- 9	31'- 0	32'- 3	33'- 6
V	4'- 4	4'- 7⅜	4'- 9⅞	5'- 1⅜	5'- 3⅞	5'- 7¼	5'-11¾	6'- 3¼	6'- 5⅝	6'- 9⅛
W	6'- 6	6'- 9⅜	7'- 0⅞	7'- 4⅜	7'- 7⅞	7'-11¼	8'- 4¾	8'- 8¼	8'-11⅝	9'- 3⅛
X	5'- 8	5'-11⅞	6'- 2⅞	6'- 6⅞	6'- 9¾	7'- 1¾	7'- 7⅞	7'-11¼	8'- 2¾	8'- 6¼

QUANTITIES

PIPE Dia.	REINF Lbs.	CONCRETE C.Y.
90"	1785	34.6
96"	2040	37.8
102"	2285	40.9
108"	2585	44.6
114"	3000	48.3
120"	3300	51.9
126"	3680	59.5
132"	4145	63.6
138"	4705	68.2
144"	5145	72.6

NOTE:
Quantities and steel list shown are for one headwall.

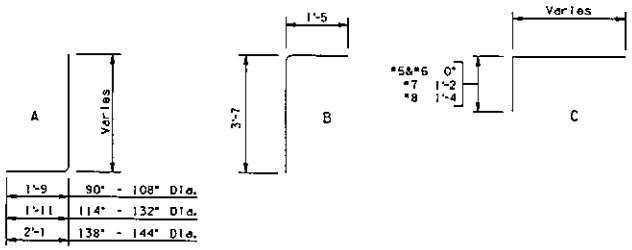

BENDS

NOTE:
For General Notes and additional Details, see SD 6.30 (1 of 5) and SD 6.33 (1 of 8).

Note to Designers
The information presented in this Standard Detail has been prepared in accordance with recognized engineering principles and is for general use. It should not be used for specific application without competent professional examination and verification of its suitability and applicability by a licensed professional engineer. Contents within the inner border line shall not be altered.

NO	DESCRIPTION OF REVISIONS	MADE BY	DATE
0	Original Issue	SAMK	7-12
1			
2			
3			
4			

DESIGN APPROVED: Shafiq K. Haroon
APPROVED FOR DISTRIBUTION: Jean A. Nehme

ARIZONA DEPARTMENT OF TRANSPORTATION
INFRASTRUCTURE DELIVERY AND OPERATIONS DIVISION
BRIDGE GROUP STRUCTURE DETAIL

PIPE CULVERT HEADWALLS
30° SKEW INLET
4 : 1 SLOPE

ROUTE | PROJECT NO. | F.A. NO. | DRAWING NO. SD 6.33 (3 of 8)
LOCATION | SHEET NO. OF

22-JAN-2016 12:50 G:\Bridge\CADD\Standards\SD_Sheets\SD 6 Drainage Structures\SD 6.30 Series\SD633-1 to 8\sd633-3_0116.dgn

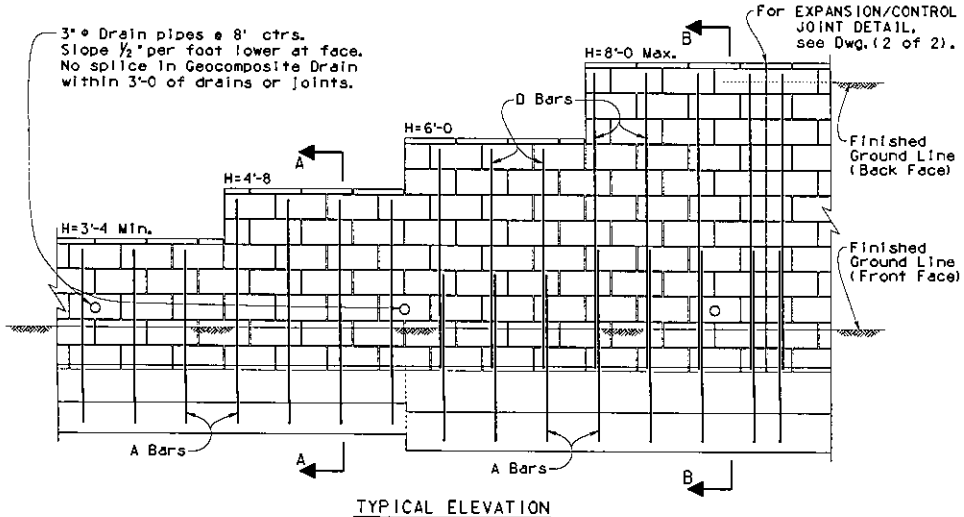

TYPICAL ELEVATION

NOTE:
For STRUCTURAL EXCAVATION LIMITS
and STRUCTURE BACKFILL LIMITS,
See Dwg.(2 of 2).

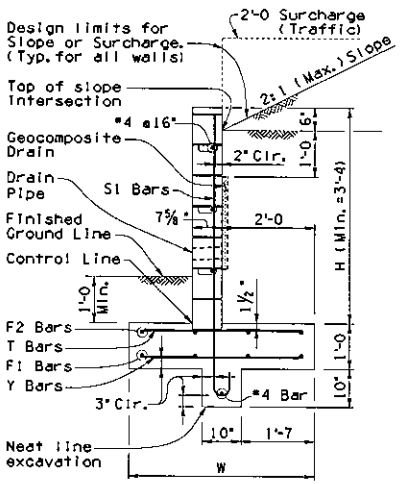

SECTION A-A
(Wall Type A)

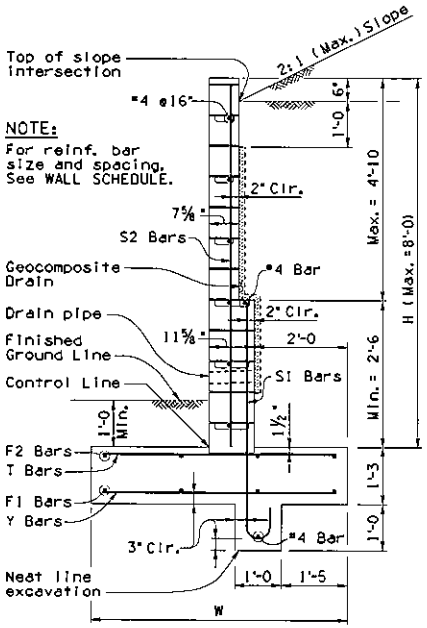

SECTION B-B
(Wall Type B)

NOTE:
For General Notes (Continued) and
Details see SD 7.02 (2 of 2).

GENERAL NOTES:

Construction Specification - Arizona Department of Transportation Standard Specifications for Road and Bridge Construction, latest Edition. ACI 530.1, Specifications for Masonry Structures.

Design Specifications - AASHTO LRFD Bridge Design Specifications, 5th Edition 2010.

Design:
Soil weight = 120 pcf
Backfill angle of internal friction = 33°
Existing ground angle of internal friction = 30°

Masonry shall meet the Materials Notes requirements. All block cells shall be filled with concrete. For wall surface treatment and type of block, see Project Plans.

All Concrete shall be Class "S" (f'c = 3000 psi).

Reinforcing steel shall conform to ASTM Specification A615. All reinforcing shall be furnished as Grade 60.

All bends and hooks shall meet the requirements of AASHTO LRFD Article 5.10. All bend dimensions for reinforcing steel shall be out-to-out of bars. All placement dimensions for reinforcing steel shall be to center of bars unless noted otherwise.

All reinforcing steel shall have 2 inch clear cover unless noted otherwise.

Compact backfill for footing and wall base minimum 95 percent of ASTM D698 maximum dry density.

Dimensions shall not be scaled from drawings.

Pay item is measured as wall height H times length of wall, and pay item includes all labor and materials for excavation, backfill, drainage, concrete footing and masonry wall with reinforcements.

Item No. 9140179 RETAINING WALL (MASONRY CANTILEVER)
Measure: Square Foot

(GENERAL NOTES Continued on Dwg. 2 of 2)

WALL SCHEDULE

Wall Height H	Wall Type	Ftg. Width W	Reinforcing Steel*						Factored Average Soil Bearing Pressure (psf)
			Wall, Vertical		Footing				
			S1	S2	F2	T	F1	Y	
3'-4 to 4'-0	A	3'-6	#4@16"	-	4-#4	#4@16"	-	-	1700
4'-4 to 5'-0	A	4'-0	#5@16"	-	4-#4	#4@16"	4-#4	#4@16"	1800
5'-4 to 6'-0	B	4'-6	#5@16"	#4@16"	4-#5	#4@16"	4-#5	#4@16"	1900
6'-4 to 7'-0	B	5'-0	#6@16"	#4@16"	4-#5	#5@16"	4-#5	#5@16"	2100
7'-4 to 8'-0	B	5'-6	#7@16"	#5@16"	4-#5	#6@16"	4-#5	#6@16"	2300

* Additional Reinforcement required at Control Joints.

DESIGN APPROVED: Shafi U. Haran
APPROVED FOR DISTRIBUTION: Jean A. Nehme

ARIZONA DEPARTMENT OF TRANSPORTATION
INFRASTRUCTURE DELIVERY AND OPERATIONS DIVISION
BRIDGE GROUP STRUCTURE DETAIL

RETAINING WALL
(MASONRY CANTILEVER)

ROUTE | PROJECT NO. | F.A. NO. | DRAWING NO. SD 7.02 (1 of 2)
LOCATION | SHEET NO. OF

Note to Designers:
The information presented in this Standard Detail has been prepared in accordance with recognized engineering principles and is for general use. It should not be used for specific application without competent professional examination and verification of its suitability and applicability by a licensed professional engineer. Contents within this lower border line shall not be altered.

NO.	DESCRIPTION OF REVISIONS	MADE BY	DATE
1	Original Issue	S.G.H.	9-10
2			
3			
4			

22-JAN-2016 15:19 G:\Bridge\CADD\Standards\SD_Sheets\SD 7 Retaining Walls\sd702-1_0116.dgn

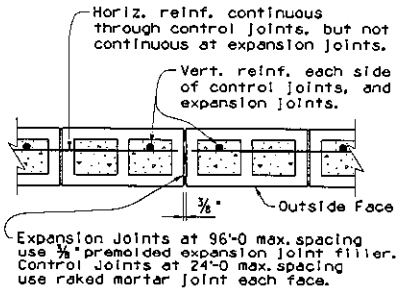

EXPANSION/CONTROL JOINT DETAIL

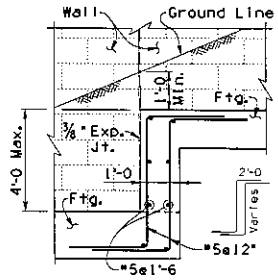

FOOTING STEP DETAIL

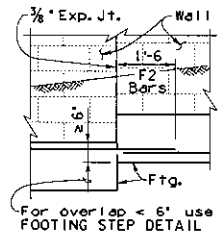

FOOTING DETAIL

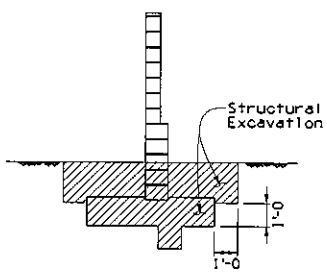

STRUCTURAL EXCAVATION LIMITS

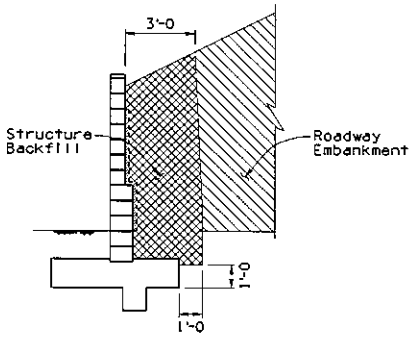

STRUCTURE BACKFILL LIMITS

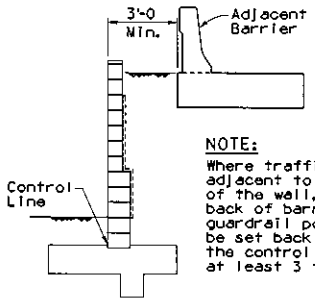

NOTE:
Where traffic is adjacent to the top of the wall, the back of barrier or guardrail post shall be set back from the control line at least 3 feet.

TYPICAL SECTION

GENERAL NOTES (Continued):

Materials Notes:

Masonry: f'm = 1500 psi, ASTM C90, Medium or Normal weight, Running Bond, SLUMP BLOCK unless noted otherwise.

Mortar: ASTM C270, Type S, Cube Strength 1800 psi, ASTM C91 cement.

Grout: ASTM C476, Type Coarse, Cube strength 2000 psi.

Reinforcing Steel: ASTM A615, Grade 60.

Joint Reinforcing: 9 Gauge Ladder or Truss type, Standard weight, fy=33,000 psi, ASTM A82 Wire.

Special Inspection Notes:

Special Inspection and testing, provided by the Department, are required for the masonry retaining wall stem to assure quality materials and construction.

(A) Pre-construction:

1) Verify correct block type to be used.
2) Verify correct mortar and grout to be used.
3) Verify the location, spacing, size and lap length of vertical reinforcing dowel bars and wall reinforcement that is within plus or minus ½" of the plan dimension as measured normal to the wall and plus or minus 2" in the longitudinal direction.
4) Verify that masonry units are clean and free from dirt when placed in the wall. Masonry units shall be dry before placement.

(B) Construction:

1) Observe, periodically, the placement of the masonry units and the making of the mortar. Verify that the initial bed joint thickness is not less than ¼" or more than 1"; subsequent bed joints shall not be less than ¼" or more than ⅝" in thickness.
2) Observe all grout placements.
3) Verify horizontal joint reinforcing size, location, and spacing.
4) Verify that all concrete masonry units are placed in uniform and true course, level and plumb with a tolerance of ¼" in 8 feet, non-cumulative.
5) Verify that concrete masonry units are placed to the desired height with joints of uniform thickness. Level, plumb and straighten before the mortar stiffens. Bond shall be plumb throughout.
6) Verify that all concrete masonry units are cured by sprinkling twice a day for minimum of 2 days.

NOTE:
For General Notes, Typical Elevation, Sections and Details see SD 7.02 (1 of 2).

Note to Designers:
The information presented in this Standard Detail has been prepared in accordance with recognized engineering principles and is for general use. It should not be used for specific application without competent professional examination and verification of its suitability and applicability by a licensed professional engineer. Contents within the inner border line shall not be altered.

NO	DESCRIPTION OF REVISIONS	MADE BY	DATE
1	Original Issue	SAUK	9-10
2			
3			
4			

DESIGN APPROVED: Shafi U. Haman
APPROVED FOR DISTRIBUTION: Jean A. Nehme

ARIZONA DEPARTMENT OF TRANSPORTATION
INFRASTRUCTURE DELIVERY AND OPERATIONS DIVISION
BRIDGE GROUP STRUCTURE DETAIL

RETAINING WALL
(MASONRY CANTILEVER)

ROUTE | PROJECT NO. | F.A. NO. | DRAWING NO. SD 7.02 (2 of 2)
LOCATION | SHEET NO. OF

22-JAN-2016 15:23 G:\Bridge\CADD\Standards\SD_Sheets\SD 7 Retaining Walls\sd702-2_0116.dgn

3.9. Sunland Gin Road and Flood Mitigation

3.9.1. Project Description

A study to find a regional solution to the flooding of Sunland Road and the vicinity south of Arizona City. The study may result in a design for roadway improvements that may be funded by Pinal County Public Works. In addition, Pinal County Flood Control is seeking FEMA funding to help pay for the project. This project also includes floodplain mapping of the Greene Wash from split with the Santa Cruz River upstream.

3.9.2. Project Information

District: 4
Funding Allocation FY18-19: $260,500 (Study)
Funding Allocation FY19-20: $0
Funding Allocation FY20-21: $0
Funding Allocation FY21-22: $0
Funding Allocation FY22-23: $0
Funding Allocation FY23-24: $0

3.10. Superior Church Avenue and Copper Mountain Motel

3.10.1. Project Description

This project includes the design and construction of the Church Ave and Copper Mountain Flood Mitigation Project within the Town of Superior. It will mitigate the risk of flooding on 10 to 15 residences and businesses as well as improve access for up to 75 residences and businesses.

3.10.2. Project Information

District: 1
Funding Allocation FY18-19: $16,000 (Design), $300,000 (Construction)
Funding Allocation FY19-20: $0
Funding Allocation FY20-21: $0
Funding Allocation FY21-22: $0
Funding Allocation FY22-23: $0
Funding Allocation FY23-24: $0

3.11. Russell Road Industrial Area

3.11.1. Project Description

This project seeks to evaluation the drainage problems in the area of Russell Road, Peters & Nall Road, and Maricopa-Casa Grande Highway. There are existing drainage problems within the Saddleback Farms Subdivision, the Industrial area, and the Ak-Chin Airport. This project's goal is to find a comprehensive regional solution to these problems that also will work with the proposed future East-West Corridor. In addition, there is an opportunity to jointly fund the project with the Ak-Chin Indian Tribe.