TECHNICAL SUPPORT DATA NOTEBOOK:

Letter of Map Revision

Queen Creek & Mine Wash

City of Superior, Pinal County, Arizona

May 2020

Prepared for:

Resolution Copper Mining Company
102 Magma Heights
Superior, AZ 85173
(855) 870-2333

Prepared by:

JE Fuller/ Hydrology & Geomorphology
40 E. Helen Street
Tucson, Arizona 85745
(520) 623-3112

TABLE OF CONTENTS

SECTION 1 : INTRODUCTION 1-1

1.1 Study Purpose 1-1

1.2 Study Authority 1-1

1.3 Study Location 1-1

1.4 Methodology 1-1

1.5 Acknowledgements 1-1

1.6 Study Results 1-1

SECTION 2 : FEMA FORMS 2-1

SECTION 3 : MAPPING AND SURVEY INFORMATION 3-1

3.1 Project Information 3-1

SECTION 4 : HYDROLOGY 4-2

4.1 Method Description 4-2

SECTION 5 : HYDRAULIC ANALYSIS 5-1

5.1 Method Description 5-1

5.2 Workmaps 5-1

5.3 Parameter Estimation 5-1

5.4 Cross-Section Description 5-1

5.5 Modeling Considerations 5-1

5.6 Floodway Modeling 5-1

5.7 Issues Encountered During the Study 5-1

SECTION 6 : EROSION AND SEDIMENT TRANSPORT ANALYSIS 6-1

SECTION 7 : DRAFT FIS 7-1

7.1 Summary of Discharges 7-1

7.2 Floodway Data 7-1

7.3 Annotated Flood Insurance Rate Maps 7-2

LIST OF FIGURES

Figure 1.1 - Location Map of Study Area 1-2

LIST OF TABLES

Table 4.2 – Applicable 100-year Discharges from Queen Creek, Superior, AZ 4-5

LIST OF APPENDICES

Appendix A: References

Appendix B: General Documentation and Correspondence

Appendix C: Mapping & Survey

Appendix D: Hydrologic Analysis Supporting Documentation

Appendix E: Hydraulic Analysis Supporting Documentation

Appendix F: Work Map & Annotated FIRM

SECTION 1: INTRODUCTION

1.1 Study Purpose

The purpose of this Technical Support Data Notebook (TSDN) is to remap the floodplain of the referenced stream(s). This LOMR is based on updated topography for Queen Creek and updated hydrology and topography for Mine Wash.

1.2 Study Authority

The study is performed for, and under contract to, the Resolution Copper Mining Company.

1.3 Study Location

This LOMR provides new mapping for the portion of Queen Creek located within the incorporated boundaries of Superior, Arizona. A location map of the study area is shown as Figure 1.1.

1.4 Methodology

This LOMR utilizes existing discharges for Queen Creek as provided in the Pinal County Flood Insurance Study (FIS) dated May 16, 2019. Additional data is provided in Appendix D to document the diversion of flows associated with the Zone A mapped tributary (Mine Wash) which is also the subject of this LOMR.

1.5 Acknowledgements

This study was made successful thanks to the input and cooperation from Pinal County and the City of Superior.

1.6 Study Results

The study resulted in new floodplain mapping for Queen Creek. The new floodplain mapping results are described in **Section 5**. Modeling files are provided in Appendix E. The study also results in elimination of Zone A mapping for a tributary from which flood flows have been diverted.

Figure 1.1 - Location Map of Study Area

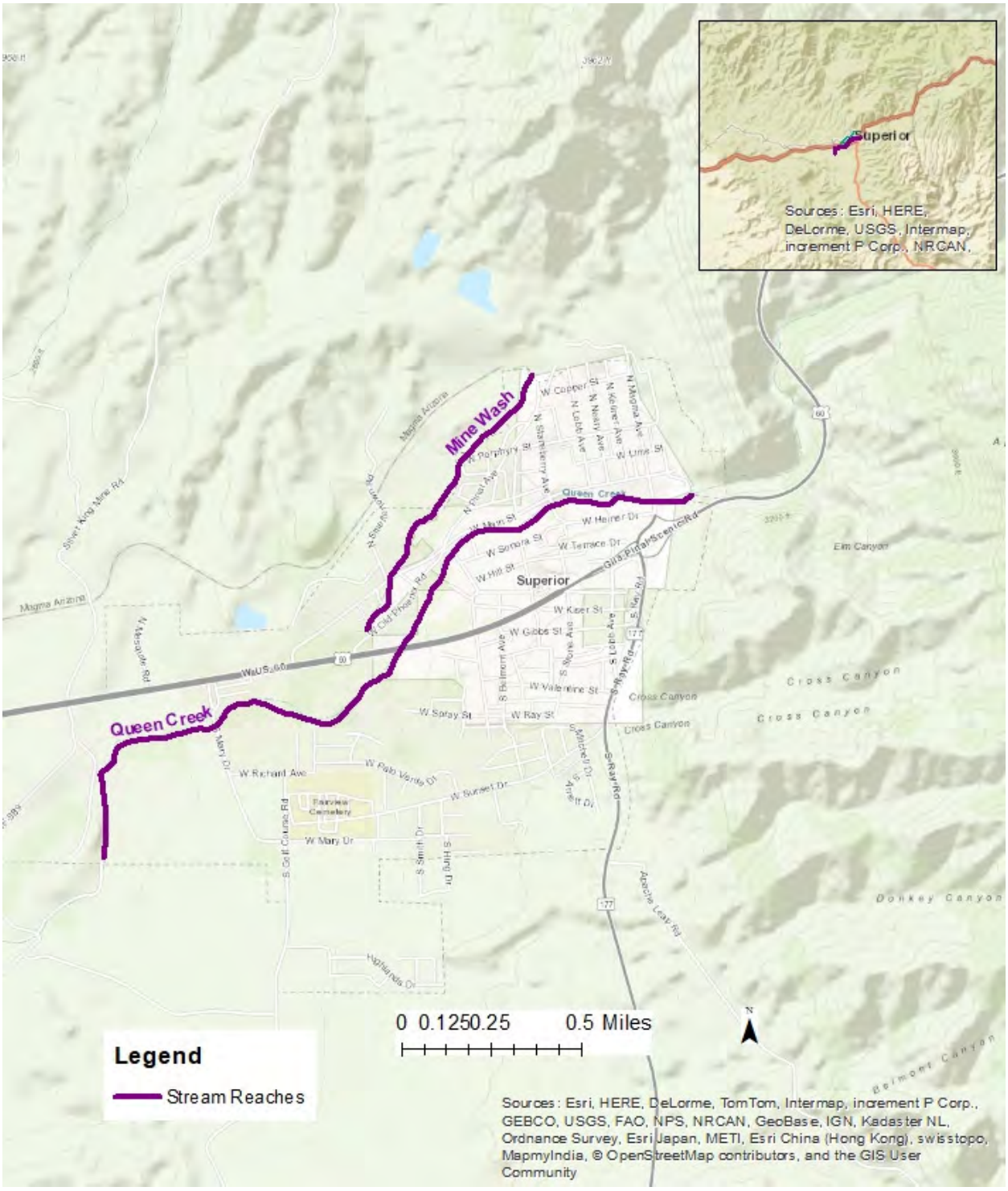

SECTION 2: FEMA FORMS

The following pages include the pertinent MT forms for this submittal.

U.S. DEPARTMENT OF HOMELAND SECURITY
FEDERAL EMERGENCY MANAGEMENT AGENCY

OVERVIEW & CONCURRENCE FORM

O.M.B No. 1660-0016
Expires February 28, 2014

PAPERWORK BURDEN DISCLOSURE NOTICE

Public reporting burden for this form is estimated to average 1 hours per response. The burden estimate includes the time for reviewing instructions, searching existing data sources, gathering and maintaining the needed data, and completing, reviewing, and submitting the form. You are not required to respond to this collection of information unless it displays a valid OMB control number. Send comments regarding the accuracy of the burden estimate and any suggestions for reducing this burden to: Information Collections Management, Department of Homeland Security, Federal Emergency Management Agency, 1800 South Bell Street, Arlington, VA 20958-3005, Paperwork Reduction Project (1660-0016). Submission of the form is required to obtain or retain benefits under the National Flood Insurance Program. **Please do not send your completed survey to the above address.**

PRIVACY ACT STATEMENT

AUTHORITY: The National Flood Insurance Act of 1968, Public Law 90-448, as amended by the Flood Disaster Protection Act of 1973, Public Law 93-234.

PRINCIPAL PURPOSE(S): This information is being collected for the purpose of determining an applicant's eligibility to request changes to National Flood Insurance Program (NFIP) Flood Insurance Rate Maps (FIRM).

ROUTINE USE(S): The information on this form may be disclosed as generally permitted under 5 U.S.C § 552a(b) of the Privacy Act of 1974, as amended. This includes using this information as necessary and authorized by the routine uses published in DHS/FEMA/NFIP/LOMA-1 National Flood Insurance Program (NFIP); Letter of Map Amendment (LOMA) February 15, 2006, 71 FR 7990.

DISCLOSURE: The disclosure of information on this form is voluntary; however, failure to provide the information requested may delay or prevent FEMA from processing a determination regarding a requested change to a (NFIP) Flood Insurance Rate Maps (FIRM).

A. REQUESTED RESPONSE FROM DHS-FEMA

This request is for a (check one):

☐ CLOMR: A letter from DHS-FEMA commenting on whether a proposed project, if built as proposed, would justify a map revision, or proposed hydrology changes (See 44 CFR Ch. 1, Parts 60, 65 & 72).

☒ LOMR: A letter from DHS-FEMA officially revising the current NFIP map to show the changes to floodplains, regulatory floodway or flood elevations. (See 44 CFR Ch. 1, Parts 60, 65 & 72)

B. OVERVIEW

1. The NFIP map panel(s) affected for all impacted communities is (are):

Community No.	Community Name	State	Map No.	Panel No.	Effective Date
Example: 480301 480287	City of Katy Harris County	TX TX	48473C 48201C	0005D 0220G	02/08/83 09/28/90
040119	Town of Superior	AZ	04021C	0286E	12/4/200

2. a. Flooding Source: Queen Creek & Mine Wash

   b. Types of Flooding: ☒ Riverine ☐ Coastal ☐ Shallow Flooding (e.g., Zones AO and AH)

   ☐ Alluvial fan ☐ Lakes ☐ Other (Attach Description)

3. Project Name/Identifier: Alamo, Sahuara and Van Buren Washes LOMR

4. FEMA zone designations affected: A, AH, AE (choices: A, AH, AO, A1-A30, A99, AE, AR, V, V1-V30, VE, B, C, D, X)

5. Basis for Request and Type of Revision:

   a. The basis for this revision request is (check all that apply)

   ☐ Physical Change ☒ Improved Methodology/Data ☐ Regulatory Floodway Revision ☐ Base Map Changes

   ☐ Coastal Analysis ☒ Hydraulic Analysis ☒ Hydrologic Analysis ☐ Corrections

   ☐ Weir-Dam Changes ☐ Levee Certification ☐ Alluvial Fan Analysis ☐ Natural Changes

   ☒ New Topographic Data ☐ Other (Attach Description)

   Note: A photograph and narrative description of the area of concern is not required, but is very helpful during review.

b. The area of revision encompasses the following structures (check all that apply)

Structures: ☐ Channelization ☐ Levee/Floodwall ☒ Bridge/Culvert

☐ Dam ☐ Fill ☐ Other (Attach Description)

6. ☐ Documentation of ESA compliance is submitted (required to initiate CLOMR review). Please refer to the instructions for more information.

C. REVIEW FEE

Has the review fee for the appropriate request category been included? ☐ Yes Fee amount: $_____

☒ No, Attach Explanation Improved data

Please see the DHS-FEMA Web site at http://www.fema.gov/plan/prevent/fhm/frm_fees.shtm **for Fee Amounts and Exemptions.**

D. SIGNATURE

All documents submitted in support of this request are correct to the best of my knowledge. I understand that any false statement may be punishable by fine or imprisonment under Title 18 of the United States Code, Section 1001.

Name: John Wallace, PE	Company: JE Fuller/Hydrology & Geomorphology	
Mailing Address: 40 E. Helen Street Tucson, AZ 85701	Daytime Telephone No.: 520-623-3112	Fax No.: 520-623-3130
	E-Mail Address: john@jefuller.com	
Signature of Requester (required): John M. Wallace	Date: 12/17/2019	

As the community official responsible for floodplain management, I hereby acknowledge that we have received and reviewed this Letter of Map Revision (LOMR) or conditional LOMR request. Based upon the community's review, we find the completed or proposed project meets or is designed to meet all of the community floodplain management requirements, including the requirements for when fill is placed in the regulatory floodway, and that all necessary Federal, State, and local permits have been, or in the case of a conditional LOMR, will be obtained. For Conditional LOMR requests, the applicant has documented Endangered Species Act (ESA) compliance to FEMA prior to FEMA's review of the Conditional LOMR application. For LOMR requests, I acknowledge that compliance with Sections 9 and 10 of the ESA has been achieved independently of FEMA's process. For actions authorized, funded, or being carried out by Federal or State agencies, documentation from the agency showing its compliance with Section 7(a)(2) of the ESA will be submitted. In addition, we have determined that the land and any existing or proposed structures to be removed from the SFHA are or will be reasonably safe from flooding as defined in 44CFR 65.2(c), and that we have available upon request by FEMA, all analyses and documentation used to make this determination.

Community Official's Name and Title: Todd Pryor, Town Manager	Community Name: Town of Superior	
Mailing Address: 734 W. Main Street Superior, AZ 85273	Daytime Telephone No.: 520-689-5752	Fax No.:
	E-Mail Address: tpryor@superioraz.gov	
Community Official's Signature (required):	Date:	

CERTIFICATION BY REGISTERED PROFESSIONAL ENGINEER AND/OR LAND SURVEYOR

This certification is to be signed and sealed by a licensed land surveyor, registered professional engineer, or architect authorized by law to certify elevation information data, hydrologic and hydraulic analysis, and any other supporting information as per NFIP regulations paragraph 65.2(b) and as described in the MT-2 Forms Instructions. All documents submitted in support of this request are correct to the best of my knowledge. I understand that any false statement may be punishable by fine or imprisonment under Title 18 of the United States Code, Section 1001.

Certifier's Name: John Wallace	License No.: AZ Civil Eng 22922	Expiration Date: 12-31-2019
Company Name: JE Fuller/Hydrology & Gemorphology	Telephone No.: 520-623-3112	Fax No.: 520-623-3130
Signature: John M. Wallace	Date: 12/17/2019	E-Mail Address: john@jefuller.com

Ensure the forms that are appropriate to your revision request are included in your submittal.

Form Name and (Number)	Required if …
☒ Riverine Hydrology and Hydraulics Form (Form 2)	New or revised discharges or water-surface elevations
☐ Riverine Structures Form (Form 3)	Channel is modified, addition/revision of bridge/culverts, addition/revision of levee/floodwall, addition/revision of dam
☐ Coastal Analysis Form (Form 4)	New or revised coastal elevations
☐ Coastal Structures Form (Form 5)	Addition/revision of coastal structure
☐ Alluvial Fan Flooding Form (Form 6)	Flood control measures on alluvial fans

U.S. DEPARTMENT OF HOMELAND SECURITY
FEDERAL EMERGENCY MANAGEMENT AGENCY

RIVERINE HYDROLOGY & HYDRAULICS FORM

O.M.B No. 1660-0016
Expires February 28, 2014

PAPERWORK BURDEN DISCLOSURE NOTICE

Public reporting burden for this form is estimated to average 3.5 hours per response. The burden estimate includes the time for reviewing instructions, searching existing data sources, gathering and maintaining the needed data, and completing, reviewing, and submitting the form. You are not required to respond to this collection of information unless a valid OMB control number appears in the upper right corner of this form. Send comments regarding the accuracy of the burden estimate and any suggestions for reducing this burden to: Information Collections Management, Department of Homeland Security, Federal Emergency Management Agency, 1800 South Bell Street, Arlington VA 20958-3005, Paperwork Reduction Project (1660-0016). Submission of the form is required to obtain or retain benefits under the National Flood Insurance Program. **Please do not send your completed survey to the above address.**

PRIVACY ACT STATEMENT

AUTHORITY: The National Flood Insurance Act of 1968, Public Law 90-448, as amended by the Flood Disaster Protection Act of 1973, Public Law 93-234.

PRINCIPAL PURPOSE(S): This information is being collected for the purpose of determining an applicant's eligibility to request changes to National Flood Insurance Program (NFIP) Flood Insurance Rate Maps (FIRM).

ROUTINE USE(S): The information on this form may be disclosed as generally permitted under 5 U.S.C § 552a(b) of the Privacy Act of 1974, as amended. This includes using this information as necessary and authorized by the routine uses published in DHS/FEMA/NFIP/LOMA-1 National Flood Insurance Program (NFIP); Letter of Map Amendment (LOMA) February 15, 2006, 71 FR 7990.

DISCLOSURE: The disclosure of information on this form is voluntary; however, failure to provide the information requested may delay or prevent FEMA from processing a determination regarding a requested change to a NFIP Flood Insurance Rate Maps (FIRM).

Flooding Source: Queen Creek & Mine Wash

Note: Fill out one form for each flooding source studied

A. HYDROLOGY

1. Reason for New Hydrologic Analysis (check all that apply)

☐ Not revised (skip to section B) ☐ No existing analysis ☒ Improved data
☐ Alternative methodology ☐ Proposed Conditions (CLOMR) ☐ Changed physical condition of watershed

2. Comparison of Representative 1%-Annual-Chance Discharges

Location	Drainage Area (Sq. Mi.)	Effective/FIS (cfs)	Revised (cfs)
Queen Creek	13.42	11400	11400 (not revised)
Mine Wash	NA	NA	NA

3. Methodology for New Hydrologic Analysis (check all that apply)

☐ Statistical Analysis of Gage Records ☒ Precipitation/Runoff Model → Specify Model: Existing FIS data
☐ Regional Regression Equations ☐ Other (please attach description)

Please enclose all relevant models in digital format, maps, computations (including computation of parameters), and documentation to support the new analysis.

4. Review/Approval of Analysis

If your community requires a regional, state, or federal agency to review the hydrologic analysis, please attach evidence of approval/review.

5. Impacts of Sediment Transport on Hydrology

Is the hydrology for the revised flooding source(s) affected by sediment transport? ☐ Yes ☒ No

If yes, then fill out Section F (Sediment Transport) of Form 3. If No, then attach your explanation..

B. HYDRAULICS

1. Reach to be Revised

	Description	Cross Section	Water-Surface Elevations (ft.) Effective	Proposed/Revised
Downstream Limit*	Queen Creek at Corporate limit	0	NA	2603.8
Upstream Limit*	Queen Creek 500'E Magma Ave	12066	NA	2831.0

*Proposed/Revised elevations must tie-into the Effective elevations within 0.5 foot at the downstream and upstream limits of revision.

2. Hydraulic Method/Model Used: HEC-RAS

3. Pre-Submittal Review of Hydraulic Models*

DHS-FEMA has developed two review programs, CHECK-2 and CHECK-RAS, to aid in the review of HEC-2 and HEC-RAS hydraulic models, respectively. We recommend that you review your HEC-2 and HEC-RAS models with CHECK-2 and CHECK-RAS.

4.

Models Submitted	Natural Run		Floodway Run		Datum
Duplicate Effective Model*	File Name: NA	Plan Name: NA	File Name: NA	Plan Name: NA	NA
Corrected Effective Model*	File Name: NA	Plan Name: NA	File Name: NA	Plan Name: NA	NA
Existing or Pre-Project Conditions Model	File Name: na	Plan Name: NA	File Name: NA	Plan Name: NA	NA
Revised or Post-Project Conditions Model	File Name: Alamo	Plan Name: Alamo	File Name: NA	Plan Name: NA	NA
Other - (attach description)	File Name: NA	Plan Name: NA	File Name: NA	Plan Name: NA	NA

* For details, refer to the corresponding section of the instructions.

☒ Digital Models Submitted? (Required)

C. MAPPING REQUIREMENTS

A **certified topographic work map** must be submitted showing the following information (where applicable): the boundaries of the effective, existing, and proposed conditions 1%-annual-chance floodplain (for approximate Zone A revisions) or the boundaries of the 1%- and 0.2%-annual-chance floodplains and regulatory floodway (for detailed Zone AE, AO, and AH revisions); location and alignment of all cross sections with stationing control indicated; stream, road, and other alignments (e.g., dams, levees, etc.); current community easements and boundaries; boundaries of the requester's property; certification of a registered professional engineer registered in the subject State; location and description of reference marks; and the referenced vertical datum (NGVD, NAVD, etc.).

☐ Digital Mapping (GIS/CADD) Data Submitted (preferred)

Topographic Information: 2015 & 2018 1' topograhy

Source: Cooper Aerial Survey Date: 2015 & 2018

Accuracy: NSSDA

Note that the boundaries of the existing or proposed conditions floodplains and regulatory floodway to be shown on the revised FIRM and/or FBFM must tie-in with the effective floodplain and regulatory floodway boundaries. Please attach **a copy of the effective FIRM and/or FBFM**, at the same scale as the original, annotated to show the boundaries of the revised 1%-and 0.2%-annual-chance floodplains and regulatory floodway that tie-in with the boundaries of the effective 1%-and 0.2%-annual-chance floodplain and regulatory floodway at the upstream and downstream limits of the area on revision.

☒ Annotated FIRM and/or FBFM (Required)

D. COMMON REGULATORY REQUIREMENTS*

1. For LOMR/CLOMR requests, do Base Flood Elevations (BFEs) increase? ☒ Yes ☐ No

   a. For CLOMR requests, if either of the following is true, please submit **evidence of compliance with Section 65.12 of the NFIP regulations**:

   - The proposed project encroaches upon a regulatory floodway and would result in increases above 0.00 foot compared to pre-project conditions.
   - The proposed project encroaches upon a SFHA with or without BFEs established and would result in increases above 1.00 foot compared to pre-project conditions.

   b. Does this LOMR request cause increase in the BFE and/or SFHA compared with the effective BFEs and/or SFHA? ☒ Yes ☐ No

   If Yes, please attach **proof of property owner notification and acceptance (if available)**. Elements of and examples of property owner notifications can be found in the MT-2 Form 2 Instructions. See note below

2. Does the request involve the placement or proposed placement of fill? ☐ Yes ☒ No

   If Yes, the community must be able to certify that the area to be removed from the special flood hazard area, to include any structures or proposed structures, meets all of the standards of the local floodplain ordinances, and is reasonably safe from flooding in accordance with the NFIP regulations set forth at 44 CFR 60.3(A)(3), 65.5(a)(4), and 65.6(a)(14). Please see the MT-2 instructions for more information.

3. For LOMR requests, is the regulatory floodway being revised? ☒ Yes ☐ No

   If Yes, attach **evidence of regulatory floodway revision notification**. As per Paragraph 65.7(b)(1) of the NFIP Regulations, notification is required for requests involving revisions to the regulatory floodway. (Not required for revisions to approximate 1%-annual-chance floodplains [studied Zone A designation] unless a regulatory floodway is being established. Elements and examples of regulatory floodway revision notification can be found in the MT-2 Form 2 Instructions.)

4. For CLOMR requests, please submit documentation to FEMA and the community to show that you have complied with Sections 9 and 10 of the Endangered Species Act (ESA).

For actions authorized, funded, or being carried out by Federal or State agencies, please submit documentation from the agency showing its compliance with Section 7(a)(2) of the ESA. Please see the MT-2 instructions for more detail.

* Not inclusive of all applicable regulatory requirements. For details, see 44 CFR parts 60 and 65.

Note; Property notifications will be done after resolution of all technical comments and finalization of the revised mapping.

DEPARTMENT OF HOMELAND SECURITY
FEDERAL EMERGENCY MANAGEMENT AGENCY

RIVERINE STRUCTURES FORM

O.M.B. NO. 1660-0016
Expires February 28, 2014

PAPERWORK BURDEN DISCLOSURE NOTICE

Public reporting burden for this form is estimated to average 7 hours per response. The burden estimate includes the time for reviewing instructions, searching existing data sources, gathering and maintaining the needed data, and completing, reviewing, and submitting the form. You are not required to respond to this collection of information unless a valid OMB control number appears in the upper right corner of this form. Send comments regarding the accuracy of the burden estimate and any suggestions for reducing this burden to: Information Collections Management, Department of Homeland Security, Federal Emergency Management Agency, 1800 South Bell Street, Arlington, VA 20598-3005, Paperwork Reduction Project (1660-0016). Submission of the form is required to obtain or retain benefits under the National Flood Insurance Program. **Please do not send your completed survey to the above address.**

PRIVACY ACT STATEMENT

AUTHORITY: The National Flood Insurance Act of 1968, Public Law 90-448, as amended by the Flood Disaster Protection Act of 1973, Public Law 93-234.

PRINCIPAL PURPOSE(S): This information is being collected for the purpose of determining an applicant's eligibility to request changes to National Flood Insurance Program (NFIP) Flood Insurance Rate Maps (FIRM).

ROUTINE USE(S): The information on this form may be disclosed as generally permitted under 5 U.S.C § 552a(b) of the Privacy Act of 1974, as amended. This includes using this information as necessary and authorized by the routine uses published in DHS/FEMA/NFIP/LOMA-1 National Flood Insurance Program; Letter of Map Amendment (LOMA) February 15, 2006, 71 FR 7990.

DISCLOSURE: The disclosure of information on this form is voluntary; however, failure to provide the information requested may delay or prevent FEMA from processing a determination regarding a requested change to a NFIP Flood Insurance Rate Maps (FIRM).

Flooding Source: Queen Creek & Mine Wash

Note**:** Fill out one form for each flooding source studied.

A. GENERAL

Complete the appropriate section(s) for each Structure listed below:

Channelization.....complete Section B
Bridge/Culvert.....complete Section C
Dam.....complete Section D
Levee/Floodwall.....complete Section E
Sediment Transport.....complete Section F (if required)

Description Of Modeled Structure

1. Name of Structure: US Hwy 60 bridge

   Type (check one): ☐ Channelization ☒ Bridge/Culvert ☐ Levee/Floodwall ☐ Dam

   Location of Structure: Queen Creek @ Highway 60

   Downstream Limit/Cross Section: 6645

   Upstream Limit/Cross Section: 6900

2. Name of Structure: Magma Ave bridge

   Type (check one): ☐ Channelization ☒ Bridge/Culvert ☐ Levee/Floodwall ☐ Dam

   Location of Structure: Queen Creek @ Magma Ave

   Downstream Limit/Cross Section: 11623

   Upstream Limit/Cross Section: 11690

3. Name of Structure: _____

   Type (check one) ☐ Channelization ☐ Bridge/Culvert ☐ Levee/Floodwall ☐ Dam

   Location of Structure: _____

   Downstream Limit/Cross Section: _____

   Upstream Limit/Cross Section: _____

NOTE: FOR MORE STRUCTURES, ATTACH ADDITIONAL PAGES AS NEEDED.

B. CHANNELIZATION

Flooding Source: Queen Creek & Mine Wash

Name of Structure: NA

1. Hydraulic Considerations

The channel was designed to carry _____ (cfs) and/or the _____-year flood.

The design elevation in the channel is based on (check one):

☐ Subcritical flow ☐ Critical flow ☐ Supercritical flow ☐ Energy grade line

If there is the potential for a hydraulic jump at the following locations, check all that apply and attach an explanation of how the hydraulic jump is controlled without affecting the stability of the channel.

☐ Inlet to channel ☐ Outlet of channel ☐ At Drop Structures ☐ At Transitions

☐ Other locations (specify): _____

2. Channel Design Plans

Attach the plans of the channelization certified by a registered professional engineer, as described in the instructions.

3. Accessory Structures

The channelization includes (check one):

☐ Levees [Attach Section E (Levee/Floodwall)] ☐ Drop structures ☐ Superelevated sections

☐ Transitions in cross sectional geometry ☐ Debris basin/detention basin [Attach Section D (Dam/Basin)] ☐ Energy dissipator

☐ Weir ☐ Other (Describe):

4. Sediment Transport Considerations

Are the hydraulics of the channel affected by sediment transport? ☐ Yes ☐ No

If yes, then fill out Section F (Sediment Transport) of Form 3. If No, then attach your explanation for why sediment transport was not considered.

C. BRIDGE/CULVERT

Flooding Source: Queen Creek & Mine Wash

Name of Structure: Queen Creek @ Hwy 60 & Magma Ave

1. This revision reflects (check one):

☐ Bridge/culvert not modeled in the FIS

☐ Modified bridge/culvert previously modeled in the FIS

☒ Revised analysis of bridge/culvert previously modeled in the FIS

2. Hydraulic model used to analyze the structure (e.g., HEC-2 with special bridge routine, WSPRO, HY8): HEC-RAS
If different than hydraulic analysis for the flooding source, justify why the hydraulic analysis used for the flooding source could not analyze the structures. Attach justification.

3. Attach plans of the structures certified by a registered professional engineer. The plan detail and information should include the following (check the information that has been provided):

☒ Dimensions (height, width, span, radius, length)

☒ Shape (culverts only)

☒ Material

☐ Beveling or Rounding

☐ Wing Wall Angle

☐ Skew Angle

☐ Distances Between Cross Sections

☐ Erosion Protection

☐ Low Chord Elevations – Upstream and Downstream

☐ Top of Road Elevations – Upstream and Downstream

☒ Structure Invert Elevations – Upstream and Downstream

☒ Stream Invert Elevations – Upstream and Downstream

☐ Cross-Section Locations

4. Sediment Transport Considerations

Are the hydraulics of the structure affected by sediment transport? ☐ Yes ☒ No

If Yes, then fill out Section F (Sediment Transport) of Form 3. If no, then attach an explanation.

D. DAM/BASIN

Flooding Source: Queen Creek & Mine Wash
Name of Structure: NA

1. This request is for (check one): ☐ Existing dam/basin ☐ New dam/basin ☐ Modification of existing dam/basin

2. The dam/basin was designed by (check one): ☐ Federal agency ☐ State agency ☐ Private organization ☐ Local government agency

   Name of the agency or organization: _____

3. The Dam was permitted as (check one): ☐ Federal Dam ☐ State Dam

   Provide the permit or identification number (ID) for the dam and the appropriate permitting agency or organization

   Permit or ID number _____ Permitting Agency or Organization _____

   a. ☐ Local Government Dam ☐ Private Dam

   Provided related drawings, specification and supporting design information.

4. Does the project involve revised hydrology? ☐ Yes ☐ No

   If Yes, complete the Riverine Hydrology & Hydraulics Form (Form 2).

   Was the dam/basin designed using critical duration storm? (must account for the maximum volume of runoff)

   ☐ Yes, provide supporting documentation with your completed Form 2.

   ☐ No, provide a written explanation and justification for not using the critical duration storm.

5. Does the submittal include debris/sediment yield analysis? ☐ Yes ☐ No

   If Yes, then fill out Section F (Sediment Transport). If No, then attach your explanation for why debris/sediment analysis was not considered?

6. Does the Base Flood Elevation behind the dam/basin or downstream of the dam/basin change? ☐ Yes ☐ No

   If Yes, complete the Riverine Hydrology & Hydraulics Form (Form 2) and complete the table below.

FREQUENCY (% annual chance)	Stillwater Elevation Behind the Dam/Basin FIS	REVISED
10-year (10%)	_____	_____
50-year (2%)	_____	_____
100-year (1%)	_____	_____
500-year (0.2%)	_____	_____
Normal Pool Elevation	_____	_____

7. Please attach a copy of the formal Operation and Maintenance Plan

E. LEVEE/FLOODWALL

NA - No levees or floodwalls

SECTION 3: MAPPING AND SURVEY INFORMATION

3.1 Project Information

Mapping and survey information is included in Appendix C.

SECTION 4: HYDROLOGY

4.1 Method Description

This study utilized existing hydrology that is documented in the current FIS for Pinal County, Arizona, dated May 16, 2019. Table 4.2 (below) shows the discharge values for Queen Creek, Superior, Arizona as found in the current FIS.

Table 4.2 – Applicable 100-year Discharges for Queen Creek, Superior, AZ

Stream Name	Location	DA (mi^2)	Peak Discharges (cfs) by X% Annual Chance Flood			
			10%	2%	1%	0.2%
Queen Creek	At Mary Drive	13.42	4,600	9.800	11,400	14,200

There is no existing hydrologic data for Mine Wash in the current FIS (the stream name Mine Wash appears on FIRM panel 04021C0286E, but is not otherwise mentioned within the 2019 Pinal County FIS). Appendix D includes a hydrologic assessment of the contributing watershed to this stream. The existing Zone A mapping along Mine Wash does not actually follow a defined stream. Per the Appendix D documentation, there is little or no flow along the mapped reach. For this reason, it is recommended that the SFHA associated with this source be removed from the FIS mapping. The revised mapping included within this LOMR submittal reflect that recommendation.

SECTION 5: HYDRAULIC ANALYSIS

5.1 Method Description

HEC-RAS 4.1 was used to perform the hydraulic modeling. Modeling was performed for the 10%, 2%, 1% and 0.2% annual chance flood discharges.

Per NFIP regulations, Section 65.12(a)(4), the Town of Superior is the only community affected by the proposed remapping.

5.2 Workmaps

A Workmap and Annotated FIRM are included in Appendix F.

5.3 Parameter Estimation

Roughness values for the Queen Creek HEC-RAS model are based on review of aerial photography. Ineffective flow areas were included where appropriate to reflect areas of ineffective flow (i.e., separated hydraulically or below the level of conveyance).

5.4 Cross-Section Description

New cross-section locations were developed based on improved topographic data. All new sections are from topographic data referenced in Section 3.

5.5 Modeling Considerations

The modeling was performed to tie in at the following locations;

Stream	Downstream	Upstream
Queen Creek	Downstream limit of existing mapping within the Town of Superior.	400’ upstream of Magma Avenue.

5.6 Floodway Modeling

Floodway modeling was performed for the subject reach of Queen Creek.

5.7 Issues Encountered During the Study

The only issue encountered during the study was the elimination of flow into the tributary included in this study. Flow has been diverted from the tributary. For that reason, no mapping is proposed for the tributary. Documentation of the flow diversion is included in Appendix D.

SECTION 6: EROSION AND SEDIMENT TRANSPORT ANALYSIS

No specific erosion or sediment transport analyses were conducted as part of this study.

SECTION 7: DRAFT FIS

7.1 Summary of Discharges

See Table 4.2.

7.2 Floodway Data

			Floodway			1% Chance Flood WSEL (NAVD)		
Cross-Section	Q Total	Distance *	Top Width	Area	Velocity	Regulatory	w/ Floodway	Increase
Queen Creek	(cfs)	(ft)	(ft)	(sq ft)	(ft/s)			
12066	11400	12066	80	689	16.5	2831.0	2831.8	0.7
11845	11400	11845	96	728	15.7	2822.5	2822.5	0.0
11690	11400	11690	115	773	14.7	2818.8	2818.8	0.0
11670	Culvert	11670						0.0
11623	11400	11623	106	808	14.1	2817.4	2817.4	0.0
11445	11400	11445	79	682	16.7	2814.0	2814.0	0.0
11045	11400	11045	110	758	15.0	2804.5	2804.5	0.0
10645	11400	10645	187	989	11.5	2796.2	2796.5	0.3
10245	11400	10245	306	1356	8.4	2787.4	2788.3	0.9
9845	11400	9845	109	772	14.8	2773.3	2774.1	0.8
9445	11400	9445	237	1146	9.9	2766.0	2766.4	0.4
9045	11400	9045	357	1423	8.0	2755.0	2755.9	0.9
8645	11400	8645	221	1124	10.1	2748.3	2749.0	0.7
8245	11400	8245	237	1182	9.6	2741.1	2741.7	0.6
7845	11400	7845	200	1008	11.3	2731.9	2732.3	0.4
7445	11400	7445	193	1072	10.6	2721.6	2722.1	0.5
7113	11400	7113	198	1017	11.2	2714.9	2715.0	0.1
6900	11400	6900	389	2256	5.1	2712.4	2712.4	0.0
6770	Bridge	6770						
6645	11400	6645	404	1430	8.0	2704.3	2705.0	0.7
6245	11400	6245	320	1341	8.5	2695.2	2696.1	0.9
5845	11400	5845	397	1501	7.6	2686.5	2687.2	0.7
5445	11400	5445	262	1188	9.6	2679.8	2680.4	0.6
5045	11400	5045	240	1208	9.4	2673.7	2674.6	1.0
4645	11400	4645	181	1028	11.1	2668.6	2669.1	0.5
4245	11400	4245	363	1291	8.8	2659.1	2660.0	0.9
3845	11400	3845	303	1315	8.7	2653.5	2654.1	0.7
3445	11400	3445	200	1079	10.6	2648.5	2648.5	0.0
3246	11400	3246	313	1318	8.6	2645.8	2646.2	0.3
2995	11400	2995	222	1122	10.2	2641.6	2641.7	0.1
2631	11400	2631	409	1554	7.3	2633.6	2634.5	1.0
2217	11400	2217	475	1444	7.9	2627.9	2628.7	0.8
1845	11400	1845	596	1528	7.5	2621.1	2622.1	1.0
1444	11400	1444	551	2098	5.4	2617.3	2618.1	0.8
1045	11400	1045	459	1776	6.4	2614.8	2615.3	0.5
645	11400	645	238	1341	8.5	2610.8	2611.1	0.3
270	11400	270	183	1105	10.3	2605.7	2605.7	0.1
0	11400	0	151	1409	8.1	2603.8	2604.7	0.9

* Feet above Corporate Limits of the City of Superior

7.3 Annotated Flood Insurance Rate Maps

Annotated FIRMs are included in Appendix F.

Appendix A

References

1. FEMA, 2002, Guidelines and Specifications for Flood Hazard Mapping Partners , February, 2002.

2. HEC-RAS Users Manual

Appendix B

Correspondence

B.1 Special Problem Reports (none)

B.2 Contact (telephone) Reports (none)

B.3 Meeting Minutes or Reports (none)

B.4 General Correspondence (none)

B.5 Public Notification (none)

B.6 FEMA Correspondence (none)

Appendix C

Mapping & Survey (included as separate digital attachment)

- **Plans for Hydraulic Structures**
  - **Queen Creek @ US60**
  - **Queen Creek @ Magma Ave**

Mapping & Survey

(included as separate digital attachment)

Queen Creek @ US60 Bridge Plans

REDUCED SIZE
Do Not Scale

REDUCED SIZE
Do Not Scale

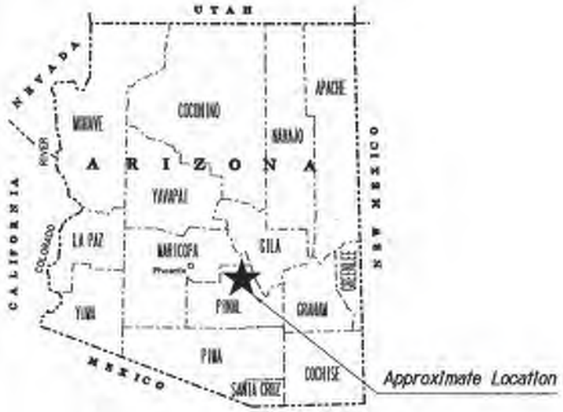

STATE OF ARIZONA
DEPARTMENT OF TRANSPORTATION
INTERMODAL TRANSPORTATION DIVISION

PROJECT PLANS

ADOT

STATE HIGHWAY
PHOENIX - GLOBE HIGHWAY
US 60

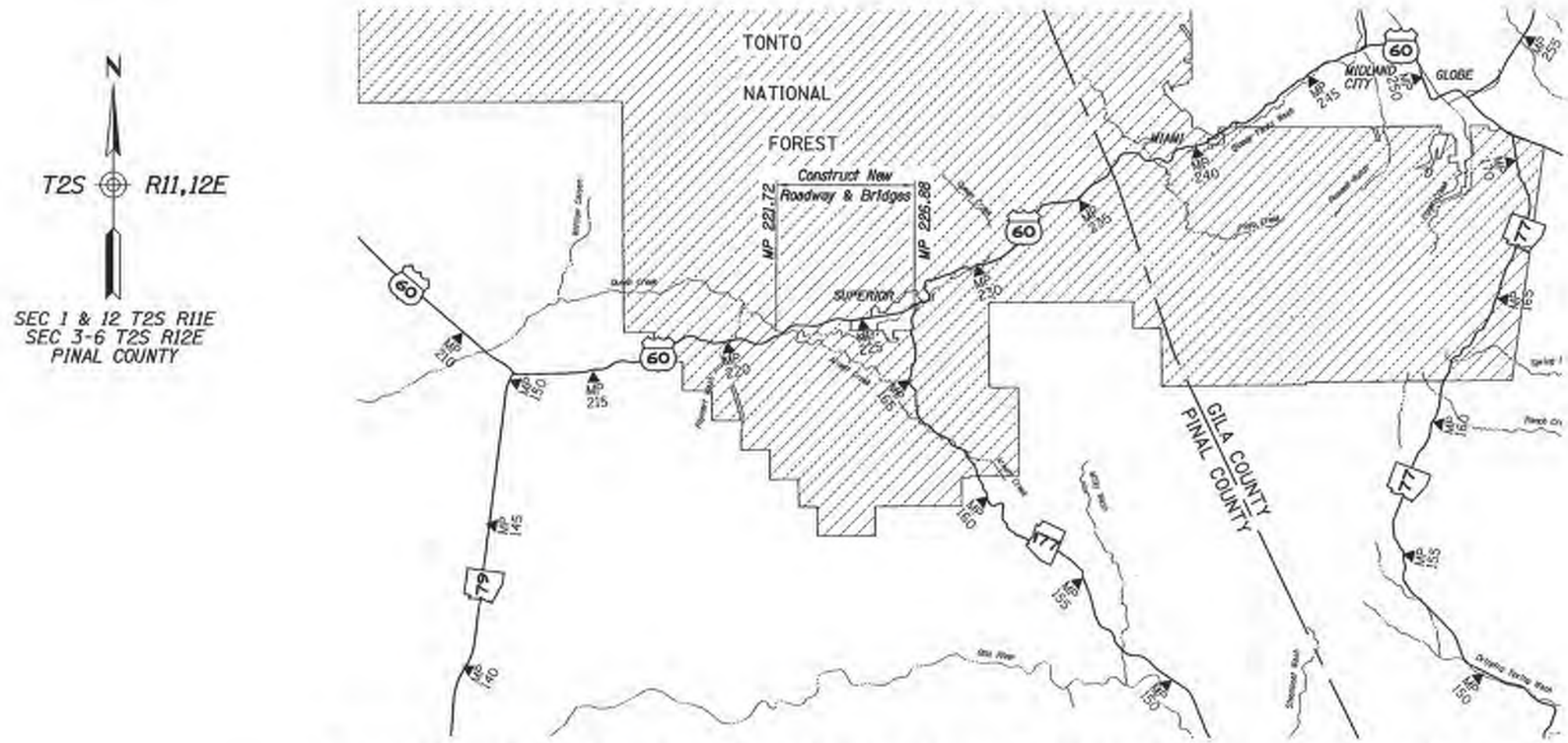

Constructed by:

FNF Construction
Construction Company

01/24/2018
Completion Date

Red-Lines by:

Mindy Teague P.E. - ADOT
Construction Administrator Name & Company

01/24/2018
Completion Date

As-Built by:

Susan Detwiler, PE - Dibble Eng.
As-Built Designer Name & Company

10/12/2018
Completion Date

SILVER KING SECTION & SUPERIOR STREETS

PROJECT NO. 060 PN 222 H7900 01 C
FEDERAL AID NO. NH-060-D(208)S

VOLUME II OF II

ARIZONA DEPARTMENT OF TRANSPORTATION
INTERMODAL TRANSPORTATION DIVISION
DALLAS HAMMIT, P.E., STATE ENGINEER

AS BUILT DATA	AS BUILT DATE 10/12/18	510	OF	872

REDUCED SIZE
Do Not Scale

REDUCED SIZE
Do Not Scale

PHOENIX-GLOBE HWY (US 60)
SILVER KING SECTION & SUPERIOR STREETS
PINAL COUNTY

FEDERAL REGION	STATE	PROJECT NO.	SHEET NO.	TOTAL SHEETS	AS BUILT
9	ARIZ.	060-D(208)S	571	754	10/12/18
		060 PN 222			

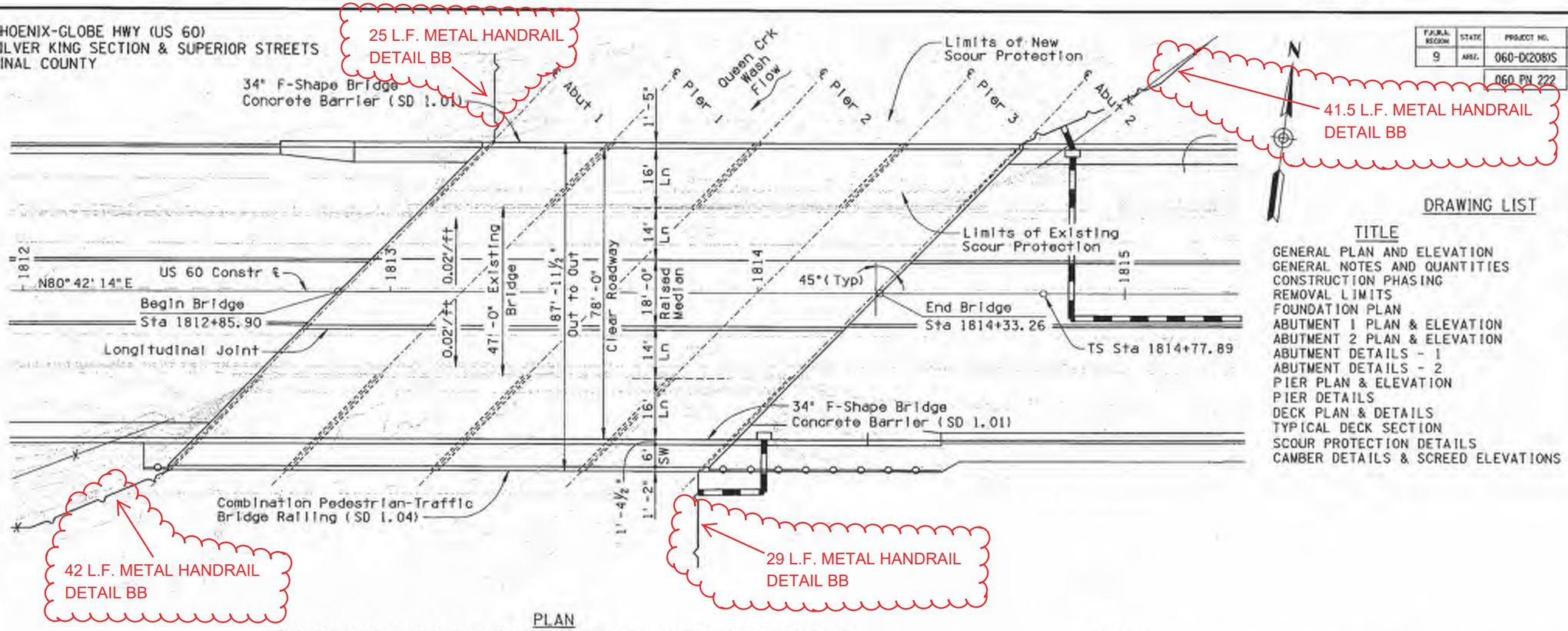

DRAWING LIST

TITLE	DRAWING NO.
GENERAL PLAN AND ELEVATION	S-8.01
GENERAL NOTES AND QUANTITIES	S-8.02
CONSTRUCTION PHASING	S-8.03
REMOVAL LIMITS	S-8.04
FOUNDATION PLAN	S-8.05
ABUTMENT 1 PLAN & ELEVATION	S-8.06
ABUTMENT 2 PLAN & ELEVATION	S-8.07
ABUTMENT DETAILS - 1	S-8.08
ABUTMENT DETAILS - 2	S-8.09
PIER PLAN & ELEVATION	S-8.10
PIER DETAILS	S-8.11
DECK PLAN & DETAILS	S-8.12
TYPICAL DECK SECTION	S-8.13
SCOUR PROTECTION DETAILS	S-8.14
CAMBER DETAILS & SCREED ELEVATIONS	S-8.15

PLAN

Existing 4-Span Reinforced Concrete Continuous Slab Bridge Widening
Contour Interval = 1'-0"
Skew 45°00'00" Rt
Scale: 1"=15'

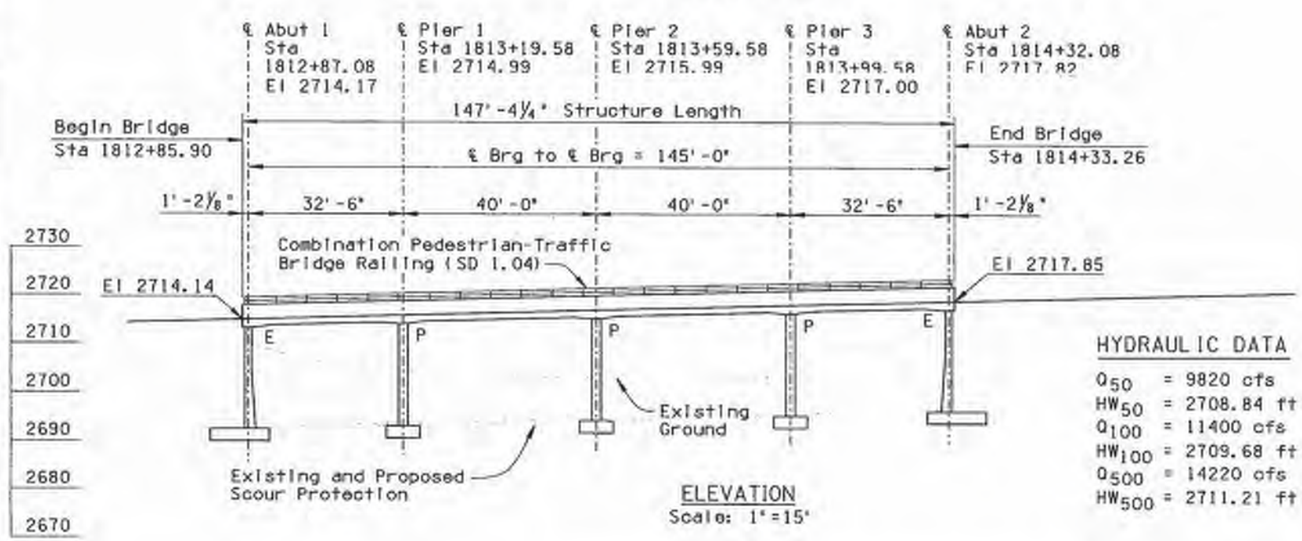

ELEVATION

Scale: 1"=15'

HYDRAULIC DATA

Q_{50} = 9820 cfs
HW_{50} = 2708.84 ft
Q_{100} = 11400 cfs
HW_{100} = 2709.68 ft
Q_{500} = 14220 cfs
HW_{500} = 2711.21 ft

NOTES:

All dimensions shown are based on "As-Built" plans and limited survey and do not necessarily correspond to structure conditions now existing. Contractor shall verify all relevant dimensions in field prior to fabrication of all materials.

The existing bridge was constructed in 1955 by the Bridge Division of the Arizona Highway Department under Project No. F-23(8).

Tubular Thrie Beam Rail was added in 1992 by the Arizona Department of Transportation under Project No. F-022-3(65).

Scour protection was added in 1999 by the Arizona Department of Transportation under Project No. 022-3(88)P.

DESCRIPTION OF WORK:

The bridge widening work for Queen Creek Wash Bridge consists of removing the reinforced concrete slab superstructure, widening the abutments and piers on both sides, and constructing a new reinforced concrete slab superstructure and bridge railing. The existing scour protection shall be extended.

	NAME	DATE
DESIGN	MC	08-14
DRAWN	DES	08-14
CHECKED	DEH	08-14

AZTEC

ARIZONA DEPARTMENT OF TRANSPORTATION
INTERMODAL TRANSPORTATION DIVISION
BRIDGE GROUP

STA 1812+
QUEEN CREEK WASH BRIDGE
GENERAL PLAN AND ELEVATION

ROUTE	MILEPOST	STRUCTURE NO.	LOCATION
US 60	226.14	436	SILVER KING SECTION & SUPERIOR STREETS

TRACS NO. H7900 01 C

060-D(208)S

DWG NO. S-8.01

PLOTTED BY: DSTONE AT 7:24:33 AM 2/12/2015 R:\Phoenix\Projects\AZE1834_On-CallStatewideLocalGovernmentProjectDesign\03_US60SilverKing-SuperiorStreets\CADD\Sheets\Structures\s8436001gp.dgn

REDUCED SIZE
Do Not Scale

F.H.W.A. REGION	STATE	PROJECT NO.	SHEET NO.	TOTAL SHEETS	AS BUILT
9	ARIZ.	060-D(208)S	572	754	10/12/18
060 PN 222					

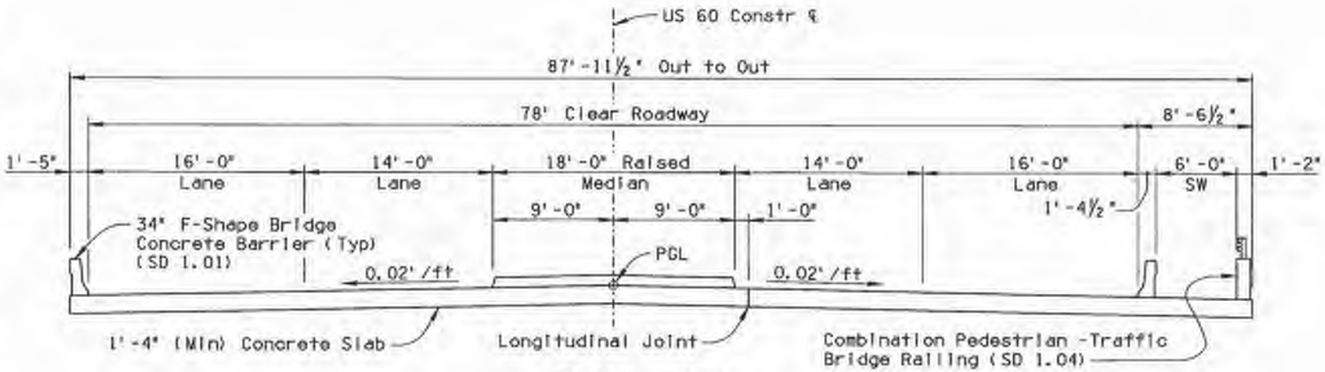

TYPICAL SECTION
Scale: ⅜"=1'-0"

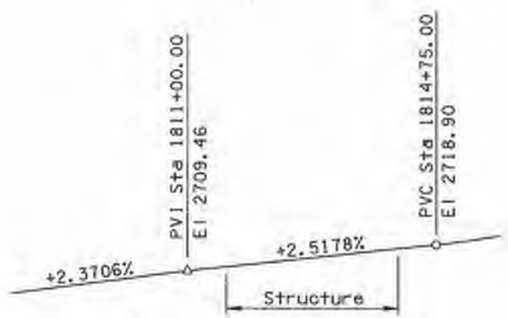

PROFILE GRADE - US 60

GENERAL NOTES:

Construction Specification -
Arizona Department of Transportation Standard Specifications for Road and Bridge Construction, Edition of 2008.

Design Specifications -
AASHTO LRFD Bridge Design Specifications, 6th Edition 2012,

Dead Load -
Dead Load includes allowance of 25 pounds per square foot for future wearing surface.

Loading Class - HL-93

Inventory and Operating ratings for HL-93 are in accordance with AASHTO Manual for Bridge Evaluation, 2nd Edition 2011 in accordance with the Load and Resistance Factor Rating Method.
Inventory Load Rating Factor - 1.475
Operating Load Rating Factor - 1.912

All concrete shall be Class 'S', unless noted otherwise.

Reinforcing steel shall conform to ASTM Specification A615.

All reinforcing steel shall be furnished as Grade 60.

All bends and hooks shall meet the requirements of AASHTO Article 5.10.2 unless noted otherwise. All bend dimensions for reinforcing steel shall be out-to-out of bars. All placement dimensions for reinforcing steel shall be to center of bars, unless noted otherwise.

All reinforcing steel shall have 2" clear cover, unless noted otherwise.

Strengths:
Superstructure (Except Barriers) . . . . . f'c = 4.5 ksi
Barriers . . . . . f'c = 4.0 ksi
Abutments and Piers . . . . . f'c = 3.5 ksi
Scour Protection . . . . . f'c = 3.0 ksi
Grade 60 Transverse Deck Reinforcing . . . . . fs = 24 ksi
All other Reinforcing Steel . . . . . fy = 60 ksi

Barriers shall not be slipped formed.

Chamfer all exposed corners ¾", unless noted otherwise.

Dimensions shall not be scaled from the drawings.

STANDARDS LIST:

Bridge Group SD Drawings: SD 1.01, SD 1.04, SD 5.01 and SD 5.02

LEGEND:

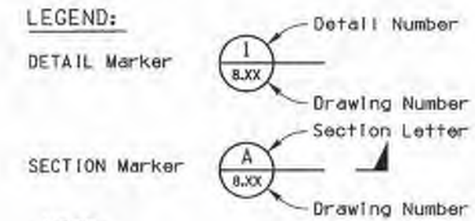

NOTE:
A line (—) in place of the Drawing Number indicates that the SECTION or DETAIL is located on the same Drawing from which the SECTION or DETAIL is cut.

APPROXIMATE QUANTITIES									
ITEM	STRUCTURAL EXCAVATION CU YD	STRUCTURE BACKFILL CU YD	CONCRETE 3000 psi CU YD	CONCRETE 3500 psi CU YD	CONCRETE 4500 psi CU YD	REINF STEEL LB	PLACE DOWELS EA	REMOVE AND SALVAGE (BRIDGE RAILING) LF	REMOVAL OF STRUCTURAL CONCRETE CU YD
ABUTMENT 1	1225	690		253		32580	56		102
PIER 1	205			85		5920	36		1
PIER 2	200			85		5920	36		1
PIER 3	180			85		5920	36		1
ABUTMENT 2	1080	655		260		33480	56		120
SUPERSTRUCTURE					767	238150		286	410
SCOUR SLAB	1585		164			15075	172		
TOTAL	4475	1345	164	768	767	337045	392	286	635
AS BUILT									

F-Shape Bridge Concrete Barrier (34") (SD 1.01) ---------- 295 LF
Combination Pedestrian-Traffic Bridge Railing (SD 1.04) -- 148 LF

	NAME	DATE
DESIGN	MC	08-14
DRAWN	DES	08-14
CHECKED	DCH	08-14

AZTEC

ARIZONA DEPARTMENT OF TRANSPORTATION
INTERMODAL TRANSPORTATION DIVISION
BRIDGE GROUP

STA 1812+
QUEEN CREEK WASH BRIDGE
GENERAL NOTES AND QUANTITIES

ROUTE	MILEPOST	STRUCTURE NO.	LOCATION
US 60	226.14	436	SILVER KING SECTION & SUPERIOR STREETS

EXPIRES 6/30/2017

DWG NO. S-8.02

TRACS NO. H7900 01 C | 060-D(208)S | 670 OF 872

REDUCED SIZE
Do Not Scale

REDUCED SIZE
Do Not Scale

FEDERAL REGION	STATE	PROJECT NO.	SHEET NO.	TOTAL SHEETS	AS BUILT
9	ARIZ.	060-D(208)S	573	754	10/12/18
		060 PN 222			

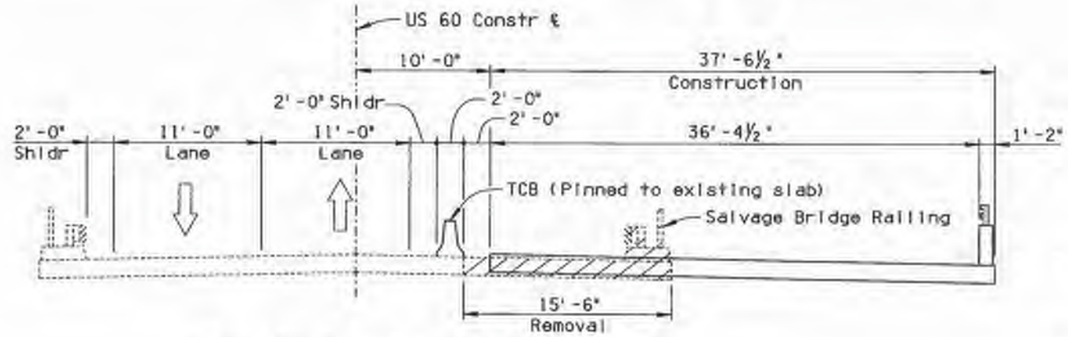

PHASE I REMOVAL & CONSTRUCTION
Scale: 3/16" = 1'-0"

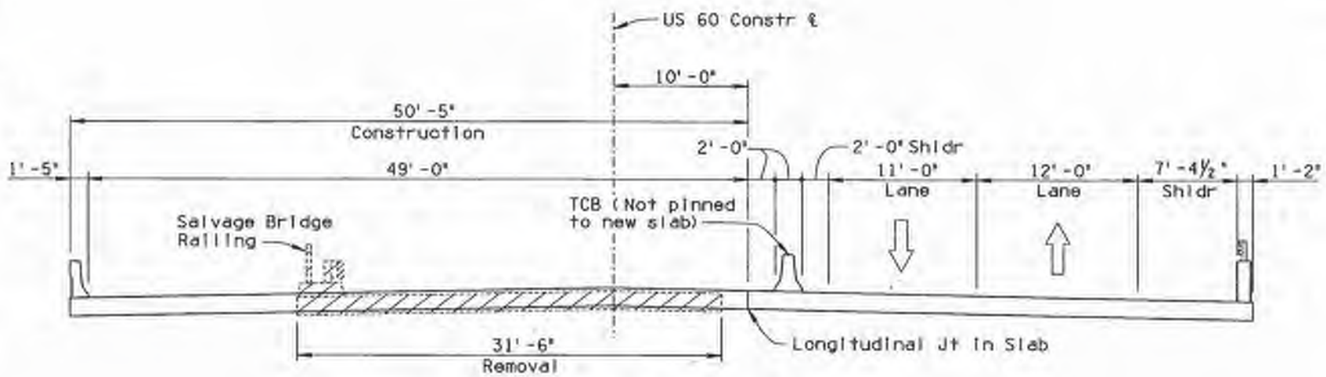

PHASE II REMOVAL & CONSTRUCTION
Scale: 3/16" = 1'-0"

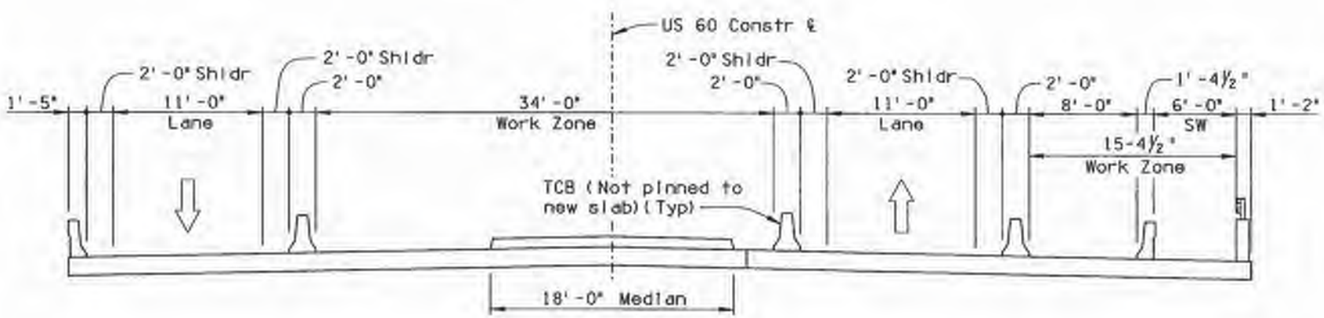

PHASE III CONSTRUCTION
Scale: 3/16" = 1'-0"

CONSTRUCTION PHASING SEQUENCE:

PHASE I

1. Place temporary construction barrier on the bridge and shift traffic to the north half of the roadway. Temporary construction barrier is to be pinned to the existing slab per Signing and Marking Standard Drawing C-3.
2. Remove the superstructure to the limits shown on the plans. Salvage bridge railing. Partially remove the substructure and scour protection to the limits shown on the plans to allow construction of the sub-structure extensions to the south.
3. Construct substructure extensions and deck slab on the south section of the bridge. Construct bridge barrier after screeding the deck slab.

PHASE II

1. Relocate temporary construction barrier to the south section of bridge and shift traffic to the south half of the roadway. Temporary constr-uction barrier is not to be pinned to the new deck slab.
2. Remove the remaining superstructure. Salvage bridge railing. Partially remove the substucture and scour protection to the limits shown on the plans to allow construction of the substructure extensions to the north.
3. Construct substructure extensions and deck slab on the north section of the bridge. Construct bridge barrier after screeding the deck slab.

PHASE III

1. Place temporary construction barrier on the north section of the bridge, additional temporary construction barrier on the south section of the bridge, and shift westbound traffic to the north section of the bridge. Temporary construction barriers are not to be pinned to the new deck slab.
2. Construct the raised median and bridge barrier.
3. Remove all temporary construction barriers and stripe the bridge deck to the final lane configuration.

	NAME	DATE
DESIGN	MC	08-14
DRAWN	DES	08-14
CHECKED	DGH	08-14

AZTEC

ARIZONA DEPARTMENT OF TRANSPORTATION
INTERMODAL TRANSPORTATION DIVISION
BRIDGE GROUP

STA 1812+
QUEEN CREEK WASH BRIDGE
CONSTRUCTION PHASING

ROUTE	MILEPOST	STRUCTURE NO.	LOCATION
US 60	226.14	436	SILVER KING SECTION & SUPERIOR STREETS

DWG NO. S-8.03

TRACS NO. H7900 01 C | 060-D(208)S

PLOTTED BY: DSTONE AT 7:33:48 AM 2/12/2015 R:\Phoenix\Projects\AZE1034_On-CallStatewideLocalGovernmentProjectDesign\03_US60SilverKing-SuperiorStreets\CADD\Sheets\Structures\s243bd03ph.dgn

REDUCED SIZE
Do Not Scale

REDUCED SIZE
Do Not Scale

F.A.H.W.A. REGION	STATE	PROJECT NO.	SHEET NO.	TOTAL SHEETS	AS BUILT
9	ARIZ.	060-D(208)S	574	754	10/12/18
060 PN 222					

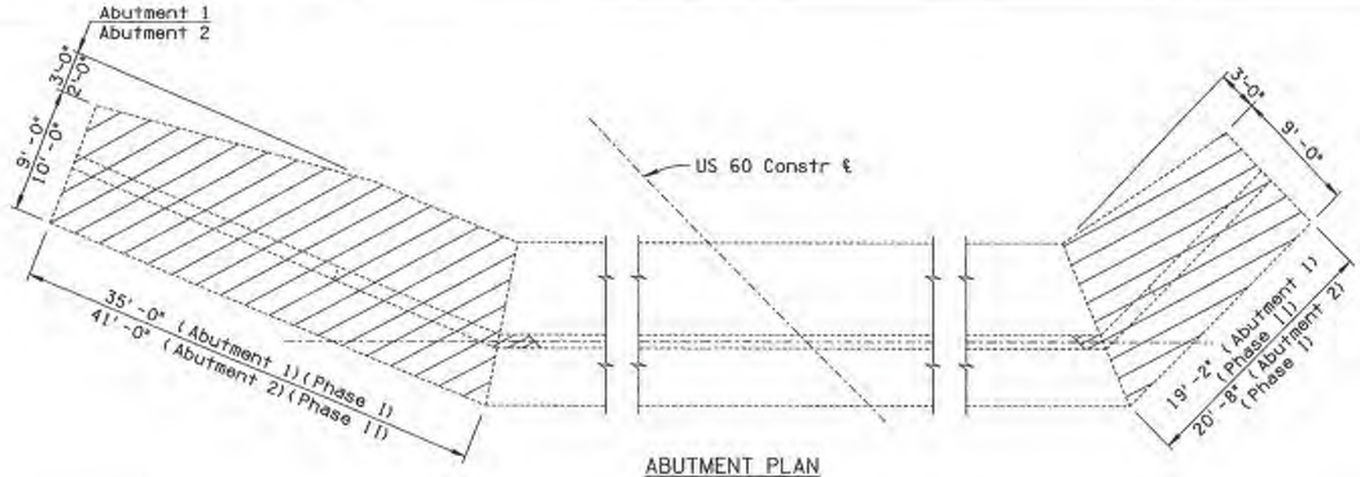

ABUTMENT PLAN
Scale: 3/16" = 1'-0"

EXISTING REINFORCING NOTES:

1. Contractor shall take all necessary measures to protect the reinforcing which is to remain after the removal of the abutment stem, footing, wingwalls, superstructure and concrete from the pier wall. Any damaged reinforcing shall be replaced as directed by the Engineer at no additional cost to the State.
2. All existing reinforcing that is to be incorporated into the new work shall be protected and free of all loose and deleterious materials prior to embedment into the new concrete.
3. Where severed reinforcing will be permanly exposed to earth or weather, cut the reinforcing flush with the concrete surface and coat with an approved epoxy.

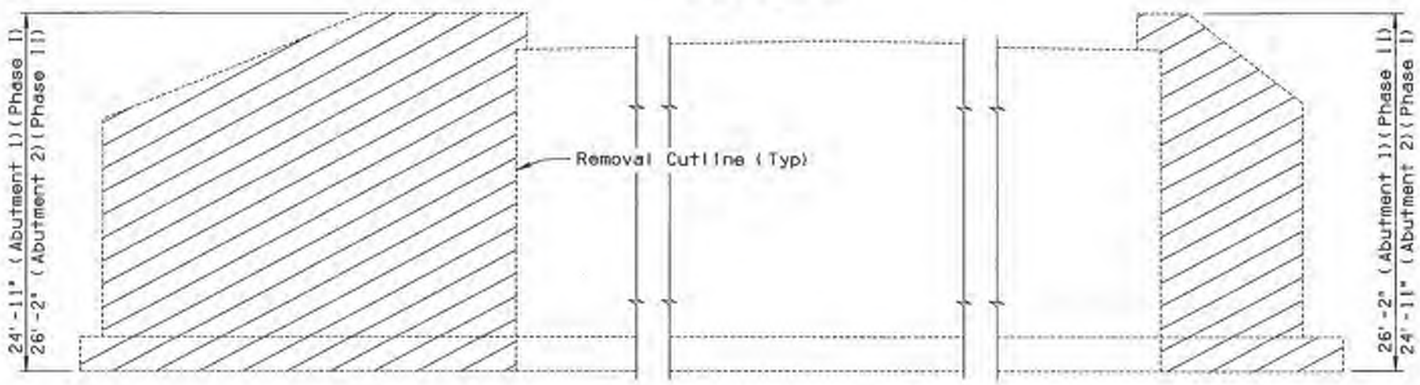

ABUTMENT ELEVATION
Scale: 3/16" = 1'-0"

LEGEND:

Indicates Structural Concrete Removal

NOTE:

For Existing Scour Protection Removal Limits, See Scour Protection Details Dwg No. S-8.14.

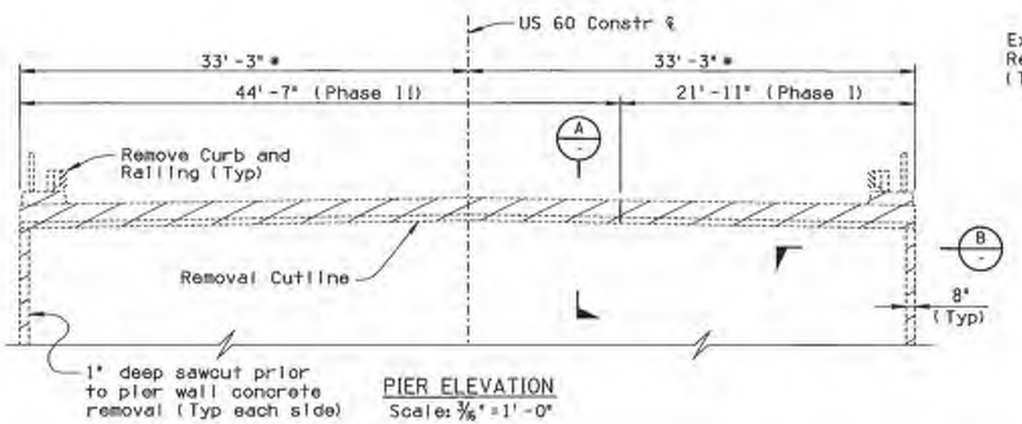

PIER ELEVATION
Scale: 3/16" = 1'-0"

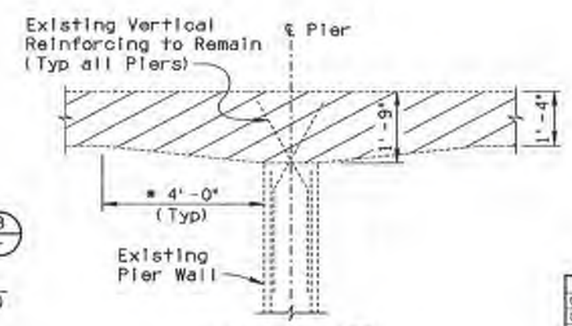

SECTION A
No Scale

* Dimension per as-built plans. Contractor to field verify

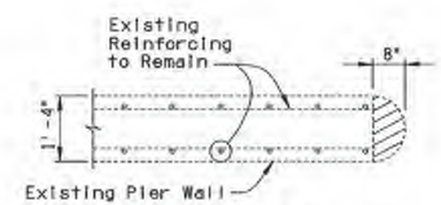

SECTION B
No Scale

	NAME	DATE
DESIGN	MC	08-14
DRAWN	DES	08-14
CHECKED	GCH	08-14

AZTEC

ARIZONA DEPARTMENT OF TRANSPORTATION
INTERMODAL TRANSPORTATION DIVISION
BRIDGE GROUP

STA 1812+
QUEEN CREEK WASH BRIDGE
REMOVAL LIMITS

ROUTE	MILEPOST	STRUCTURE NO.	LOCATION
US 60	226.14	436	SILVER KING SECTION & SUPERIOR STREETS

DWG NO. S-8.04

TRACS NO. H7900 01 C | 060-D(208)S | 672 OF 872

REDUCED SIZE
Do Not Scale

F.H.W.A. REGION	STATE	PROJECT NO.	SHEET NO.	TOTAL SHEETS	AS BUILT
9	ARIZ.	060-D(208)S	575	754	10/12/18

060 PN 222

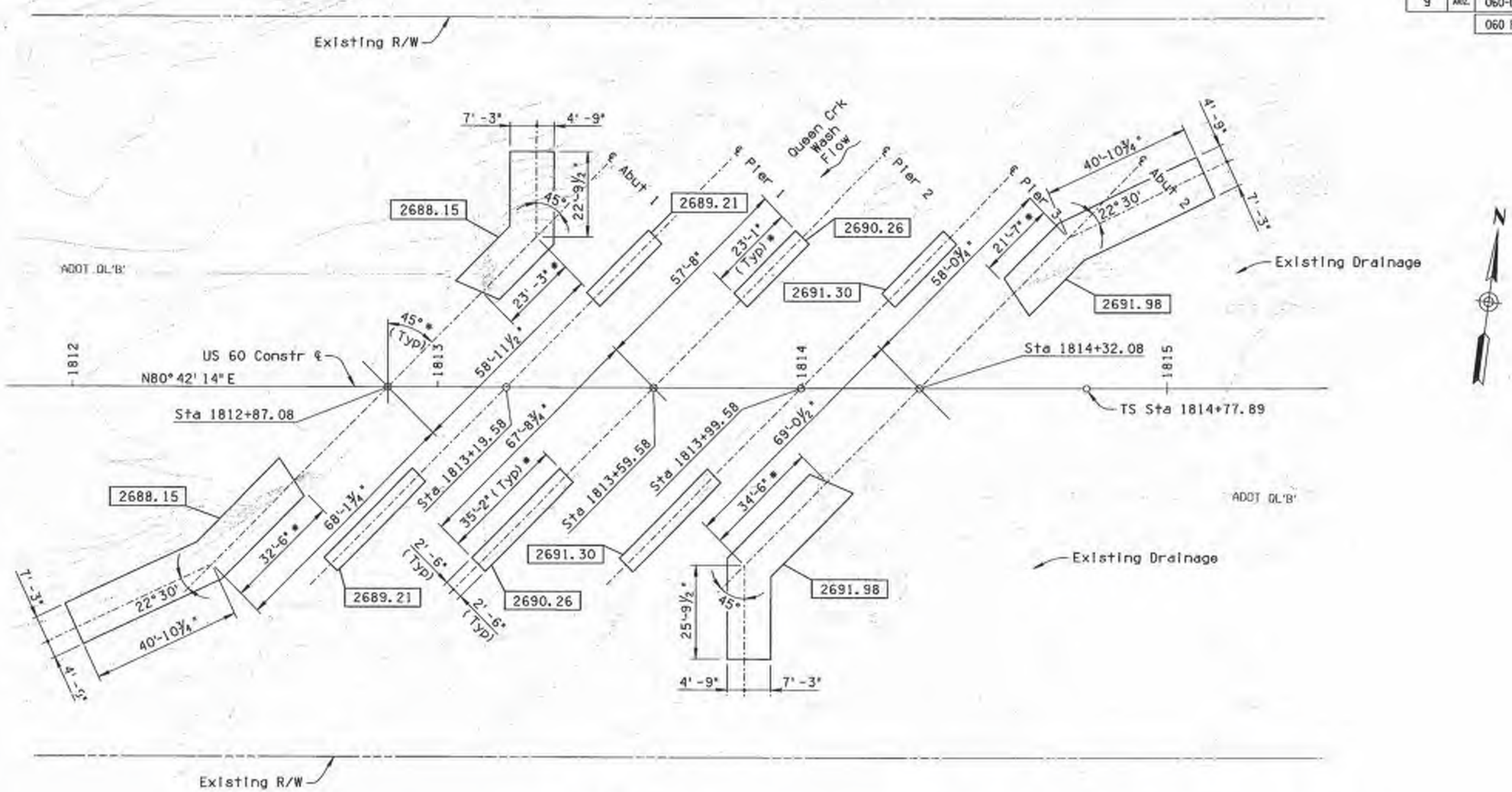

PLAN
Contour Interval = 1'-0"
Scale: 1"=15'

* See Note 3 for all dimensions marked with an asterisk

FOUNDATION NOTES:

1. [ ] indicates approximate bottom of footing elevation. Proposed footing elevation to match existing.
2. Aerial mapping prepared by ADOT Photogrammetry and Mapping in June 2009. Supplemental survey by Dibble Engineering in 2012.
3. Dimensions marked with an asterisk (*) are based on "As-Built" plans and limited survey and do not necessarily correspond to structure conditions now existing. Contractor shall verify all relevant dimensions in field prior to fabrication of all materials.

	NAME	DATE
DESIGN	MC	08-14
DRAWN	DES	08-14
CHECKED	DEH	08-14

AZTEC

ARIZONA DEPARTMENT OF TRANSPORTATION
INTERMODAL TRANSPORTATION DIVISION
BRIDGE GROUP

STA 1812+
QUEEN CREEK WASH BRIDGE
FOUNDATION PLAN

ROUTE	MILEPOST	STRUCTURE NO.	LOCATION
US 60	226.14	436	SILVER KING SECTION & SUPERIOR STREETS

EXPIRES 6/30/2017

DWG NO. S-8.05

TRACS NO. H7900 01 C

060-D(208)S

REDUCED SIZE
Do Not Scale

REDUCED SIZE
Do Not Scale

F.H.W.A. REGION	STATE	PROJECT NO.	SHEET NO.	TOTAL SHEETS	AS BUILT
9	ARIZ.	060-D(208)S	576	754	10/12/18

060 PN 222

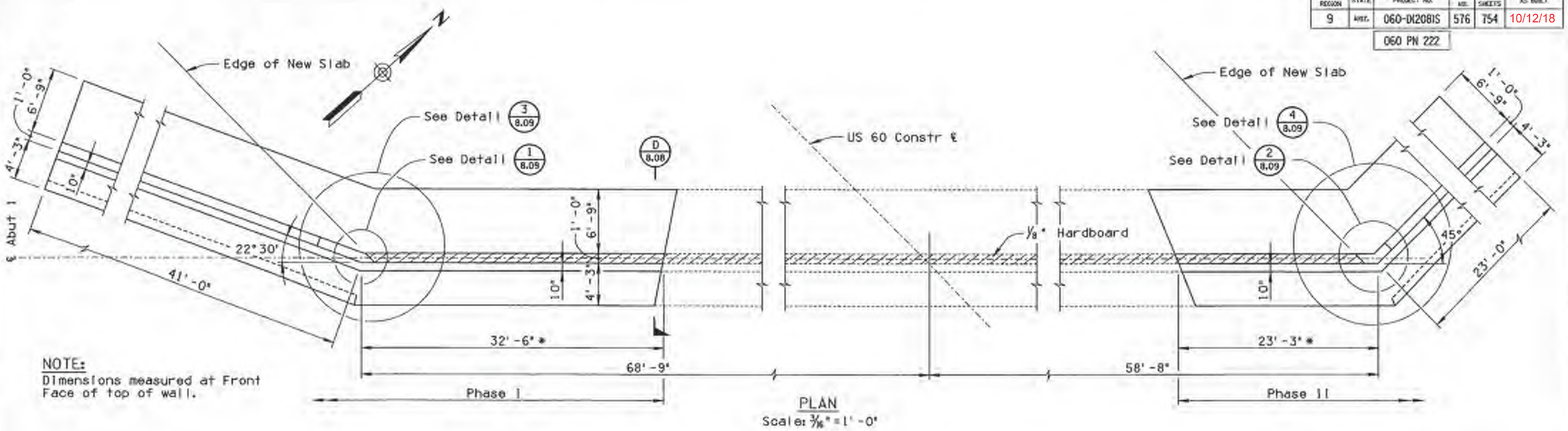

NOTE:
Dimensions measured at Front Face of top of wall.

PLAN
Scale: 3/16" = 1'-0"

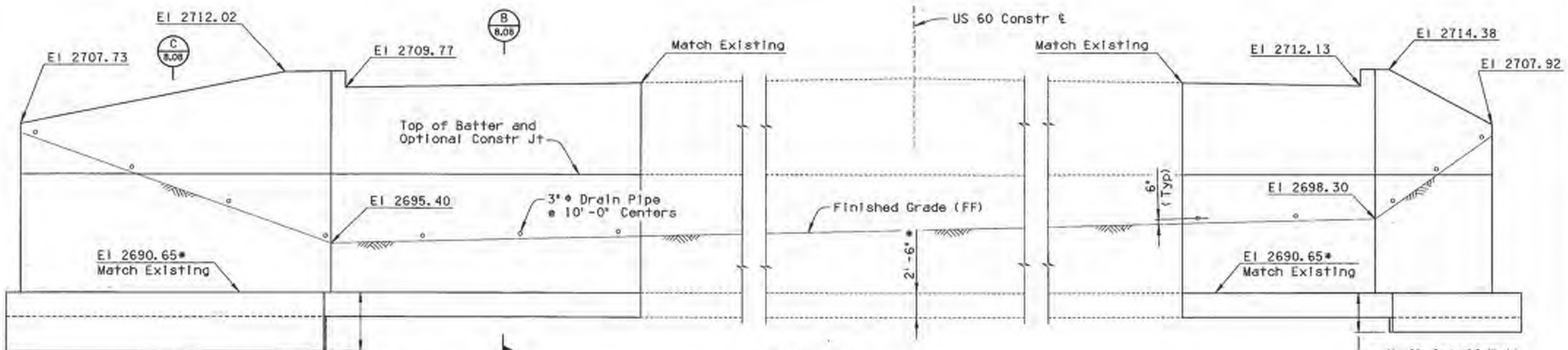

ELEVATION
(Looking Back Station)
Scale: 3/16" = 1'-0"

* NOTE:
Dimensions marked with an asterisk (*) are based on "As-Built" plans and limited survey and do not necessarily correspond to structure conditions now existing. Contractor shall verify all relevant dimensions in field prior to fabrication of all materials.

	NAME	DATE
DESIGN	MC	08-14
DRAWN	DES	08-14
CHECKED	DEH	08-14

AZTEC

ARIZONA DEPARTMENT OF TRANSPORTATION
INTERMODAL TRANSPORTATION DIVISION
BRIDGE GROUP

STA 1812+
QUEEN CREEK WASH BRIDGE
ABUTMENT I PLAN & ELEVATION

ROUTE	MILEPOST	STRUCTURE NO.	LOCATION
US 60	226.14	436	SILVER KING SECTION & SUPERIOR STREETS

DWG NO. S-8.06

TRACS NO. H7900 01 C

060-D(208)S

PLOTTED BY: DSTONE AT 7:37:13 AM 2/12/2015 H:\Phoenix\Projects\AZE1834_On-Call Statewide Local Government Project Design\03.US60SilverKing-SuperiorStreets\CADD\Sheets\Structures\s8438806abl.dgn

REDUCED SIZE
Do Not Scale

F.A.H.W.A. PROJECT	STATE	PROJECT NO.	SHEET NO.	TOTAL SHEETS	AS BUILT
9	ARIZ.	060-D(208)S	577	754	10/12/18
060 PN 222					

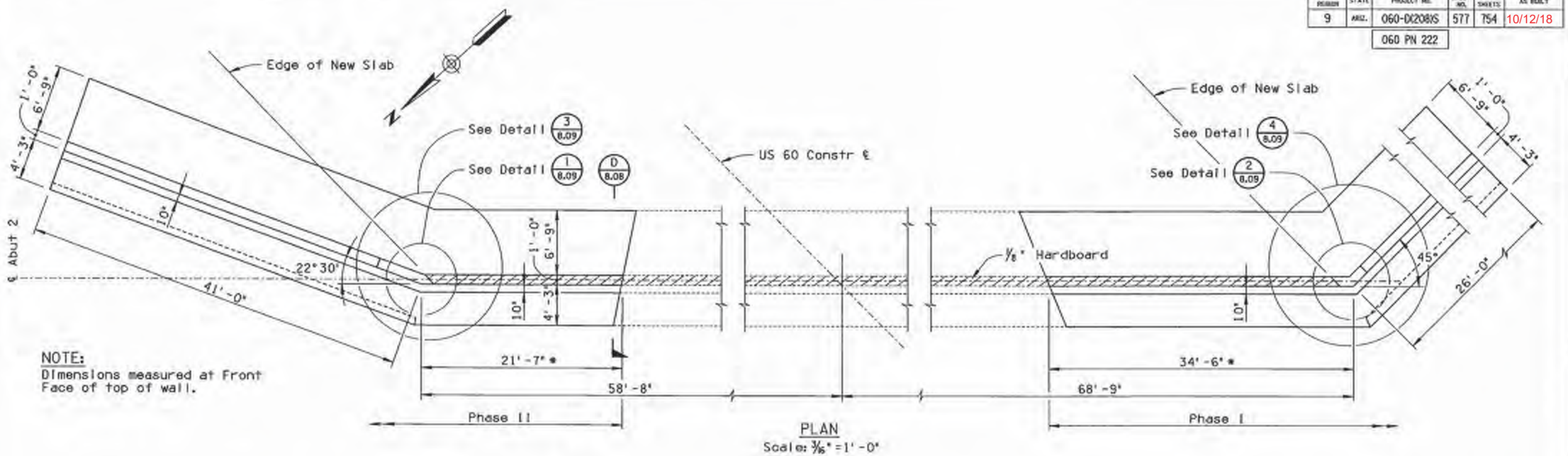

NOTE:
Dimensions measured at Front Face of top of wall.

PLAN
Scale: 3/16" = 1'-0"

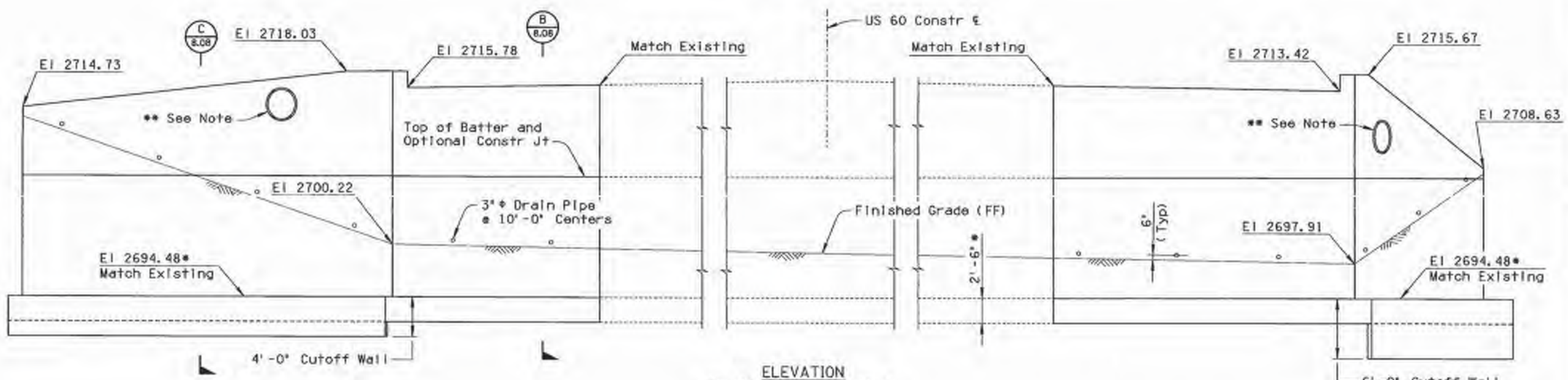

ELEVATION
(Looking Ahead Station)
Scale: 3/16" = 1'-0"

* NOTE:
Dimensions marked with an asterisk (*) are based on "As-Built" plans and limited survey and do not necessarily correspond to structure conditions now existing. Contractor shall verify all relevant dimensions in field prior to fabrication of all materials.

** NOTE:
Pipe Penetration through wall.
For Reinforcement Details, see Dwg No. G-8.15.
For Location, coordinate with Drainage Plans.

	NAME	DATE
DESIGN	MC	08-14
DRAWN	DES	08-14
CHECKED	DEH	08-14

AZTEC

ARIZONA DEPARTMENT OF TRANSPORTATION
INTERMODAL TRANSPORTATION DIVISION
BRIDGE GROUP

STA 1812+
QUEEN CREEK WASH BRIDGE
ABUTMENT 2 PLAN & ELEVATION

ROUTE	MILEPOST	STRUCTURE NO.	LOCATION
US 60	226.14	436	SILVER KING SECTION & SUPERIOR STREETS

EXPIRES 6/30/2017

DWG NO. S-8.07

TRACS NO. H7900 01 C

060-D(208)S

REDUCED SIZE
Do Not Scale

REDUCED SIZE
Do Not Scale

F.H.W.A. REGION	STATE	PROJECT NO.	SHEET NO.	TOTAL SHEETS	AS BUILT
9	ARIZ.	060-D(208)S	578	754	10/12/18
		060 PN 222			

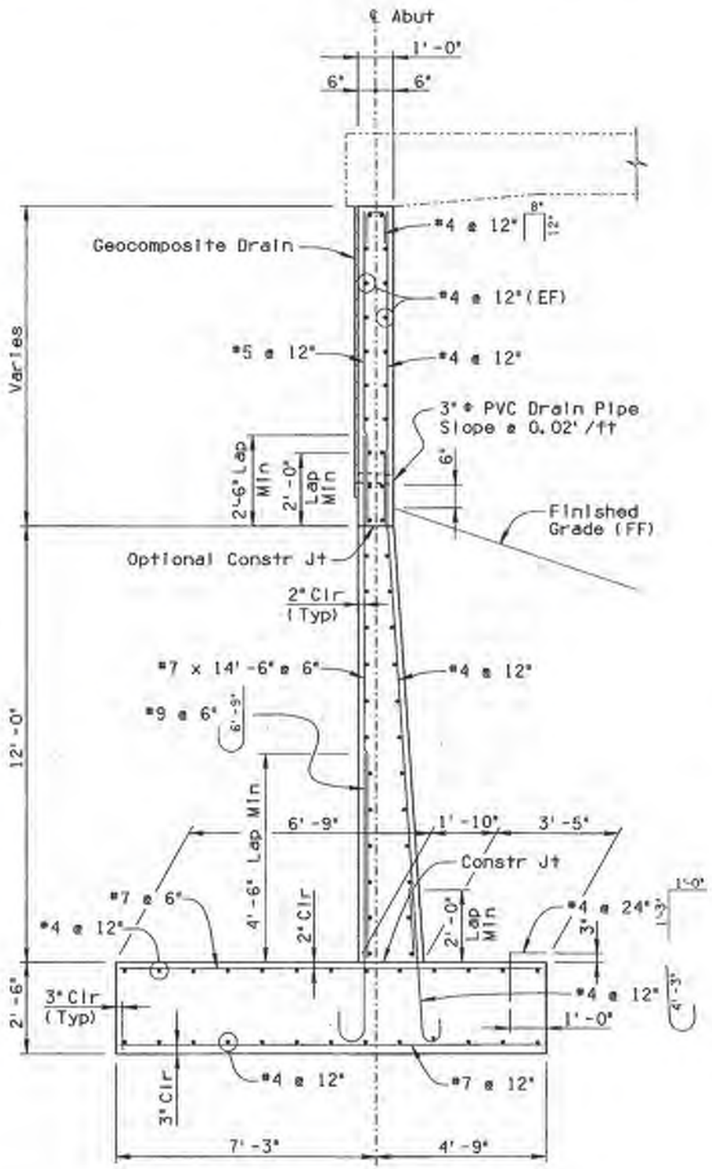

SECTION B
Scale: ½" = 1'-0"

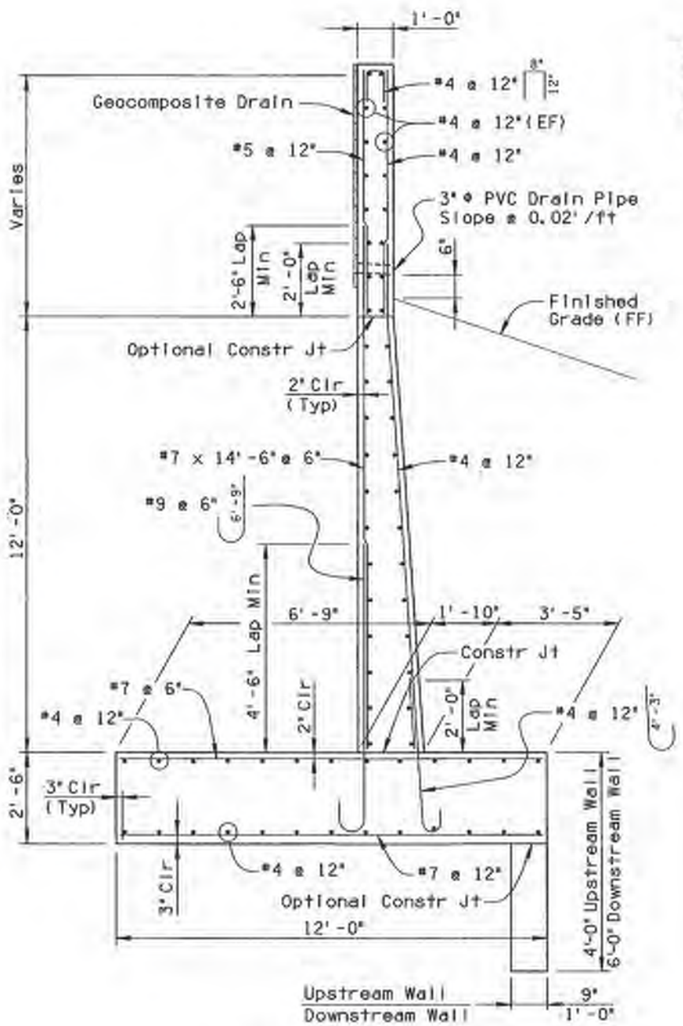

SECTION C
Scale: ½" = 1'-0"

NOTE:
See Dowel Ing Notes and Dowel Detail Elevation on Dwg No. S-8.11.

NOTE:
See Dwg No. S-8.06 and S-8.07 for limits and locations of cutoff wall. See Dwg No. S-8.14 for cutoff wall reinforcing details.

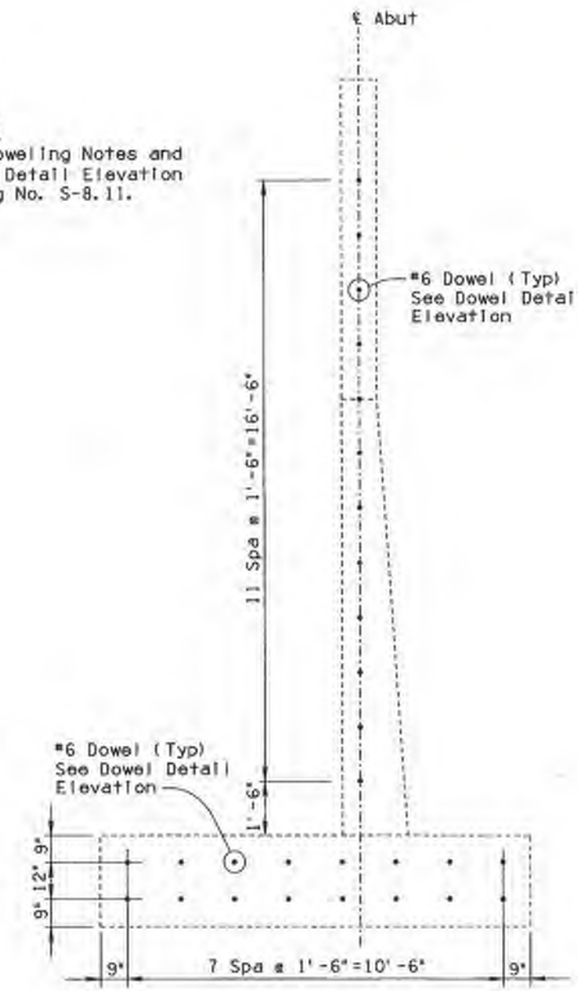

SECTION D
Scale: ½" = 1'-0"

	NAME	DATE
DESIGN	MC	06-14
DRAWN	DCS	06-14
CHECKED	DEH	06-14

AZTEC

ARIZONA DEPARTMENT OF TRANSPORTATION
INTERMODAL TRANSPORTATION DIVISION
BRIDGE GROUP

STA 1812+
QUEEN CREEK WASH BRIDGE
ABUTMENT DETAILS - 1

LOCATION: SILVER KING SECTION & SUPERIOR STREETS

ROUTE	MILEPOST	STRUCTURE NO.
US 60	226.14	436

EXPIRES 3/30/2017

DWG NO. S-8.08

TRACS NO. H7900 01 C | 060-D(208)S

PLOTTED BY: DSTONE AT 7:39:27 AM 2/12/2015 R:\Phoenix\Projects\AZE1034_On-CallStatewideLocalGovernmentProjectDesign\03_US60SilverKing-SuperiorStreets\CADD\Sheets\Structures\s043608ad1.dgn

REDUCED SIZE
Do Not Scale

REDUCED SIZE
Do Not Scale

FAHWA REGION	STATE	PROJECT NO.	SHEET NO.	TOTAL SHEETS	AS BUILT
9	ARIZ.	060-D(208)S	579	754	10/12/18
060 PN 222					

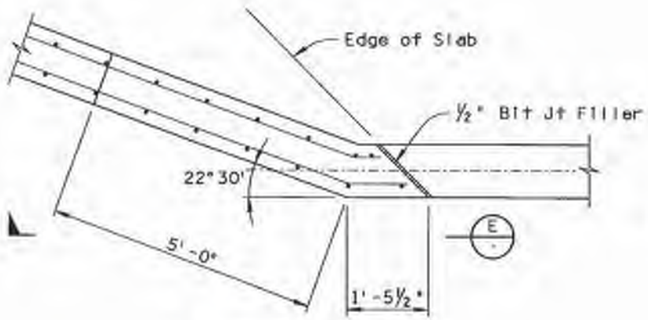

DETAIL 1
Scale: ¾"=1'-0"

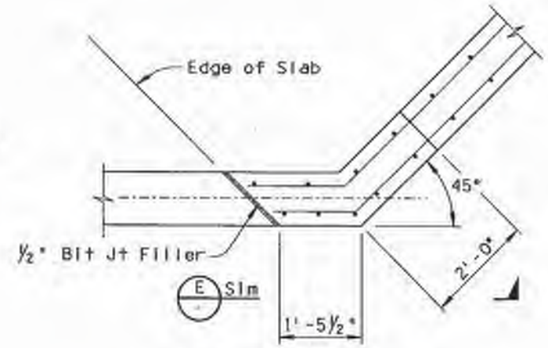

DETAIL 2
Scale: ¾"=1'-0"

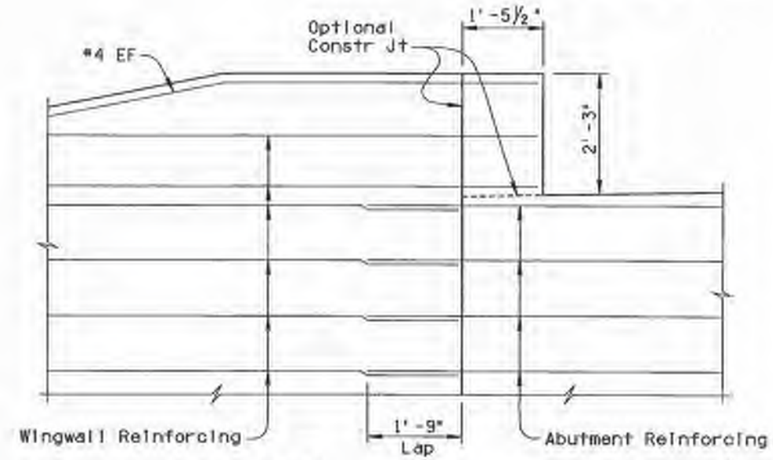

NOTE:
Vertical reinforcing bars not shown for clarity.

VIEW E
Scale: ¾"=1'-0"

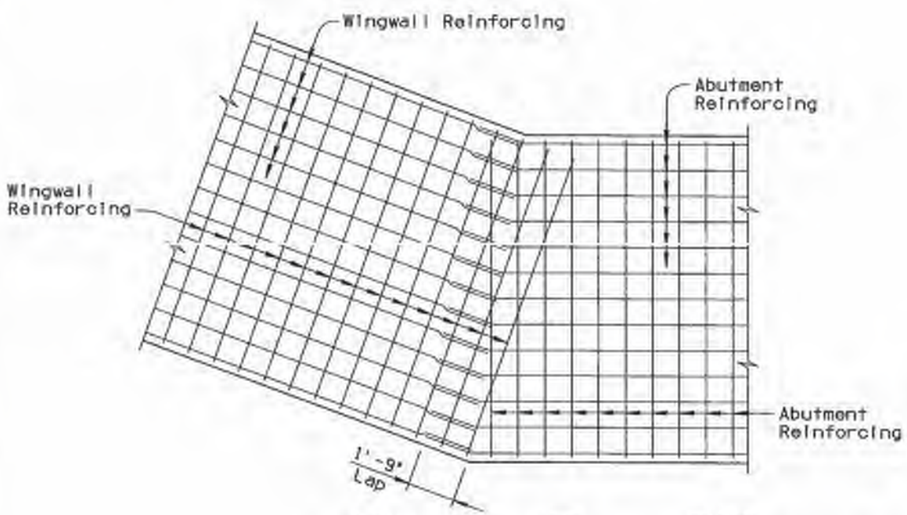

DETAIL 3
Scale: ⅜"=1'-0"

NOTES:
1. Place bottom mat of wingwall reinforcing above bottom mat of abutment reinforcing. Place top mat of wingwall reinforcing below top mat of abutment reinforcing.
2. See Dwg No. S-8.08 for abutment and wingwall reinforcing size and spacing.

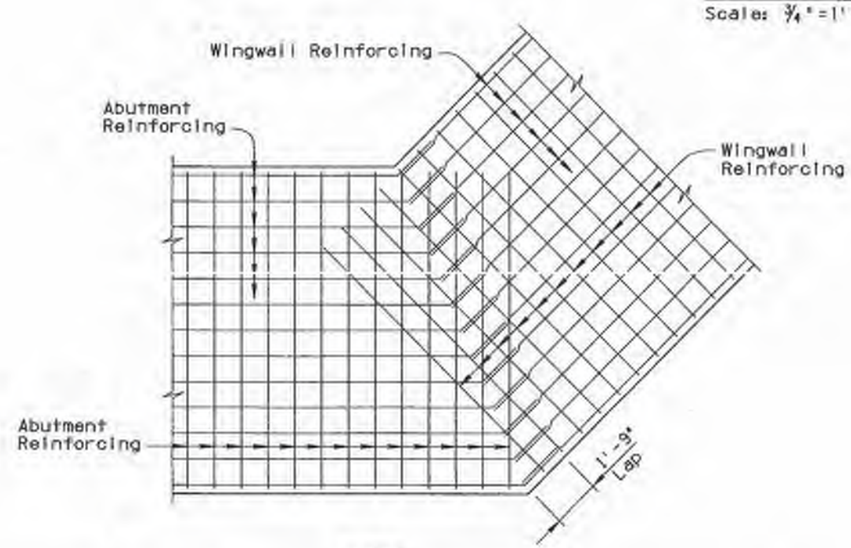

DETAIL 4
Scale: ⅜"=1'-0"

	NAME	DATE
DESIGN	MC	08-14
DRAWN	DES	08-14
CHECKED	DEH	08-14

AZTEC

ARIZONA DEPARTMENT OF TRANSPORTATION
INTERMODAL TRANSPORTATION DIVISION
BRIDGE GROUP

STA 1812+
QUEEN CREEK WASH BRIDGE
ABUTMENT DETAILS - 2

ROUTE	MILEPOST	STRUCTURE NO.	LOCATION
US 60	226.14	436	SILVER KING SECTION & SUPERIOR STREETS

TRACS NO. H7900 01 C

060-D(208)S

DWG NO. S-8.09

PLOTTED BY: DSTONE AT 7:40:46 AM 2/12/2015 R:\Phoenix\Projects\AZE1034_On-CallStatewideLocalGovernmentProjectDesign\03_US60SilverKing-SuperiorStreets\CADD\Sheets\Structures\s8436bfad2.dgn

REDUCED SIZE
Do Not Scale

REDUCED SIZE
Do Not Scale

F.H.W.A. REGION	STATE	PROJECT NO.	SHEET NO.	TOTAL SHEETS	AS BUILT
9	ARIZ.	060-D(208)S	580	754	10/12/18
		060 PN 222			

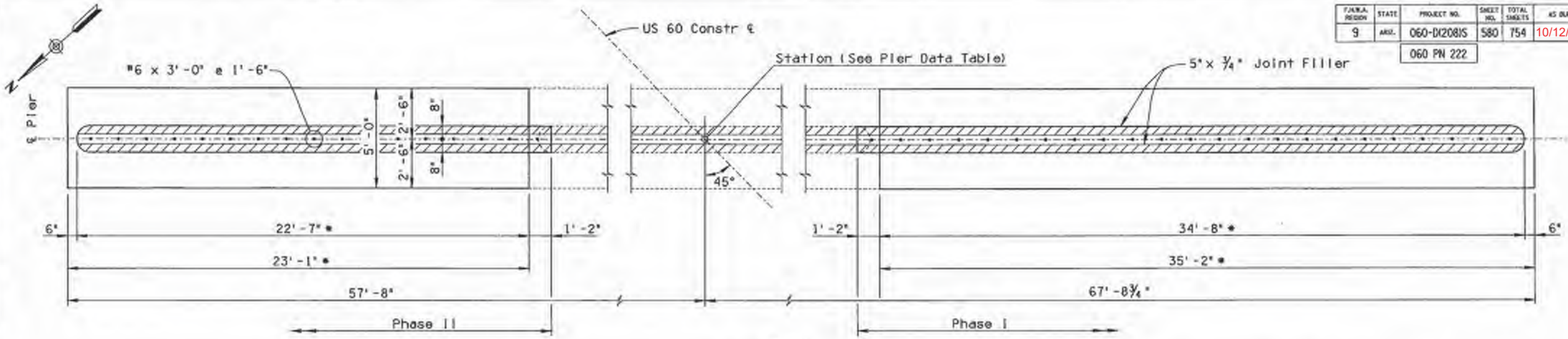

PLAN
Scale: ⅜" = 1'-0"

* NOTE:
Dimensions marked with an asterisk (*) are based on "As-Built" plans and limited survey and do not necessarily correspond to structure conditions now existing. Contractor shall verify all relevant dimensions in field prior to fabrication of all materials.

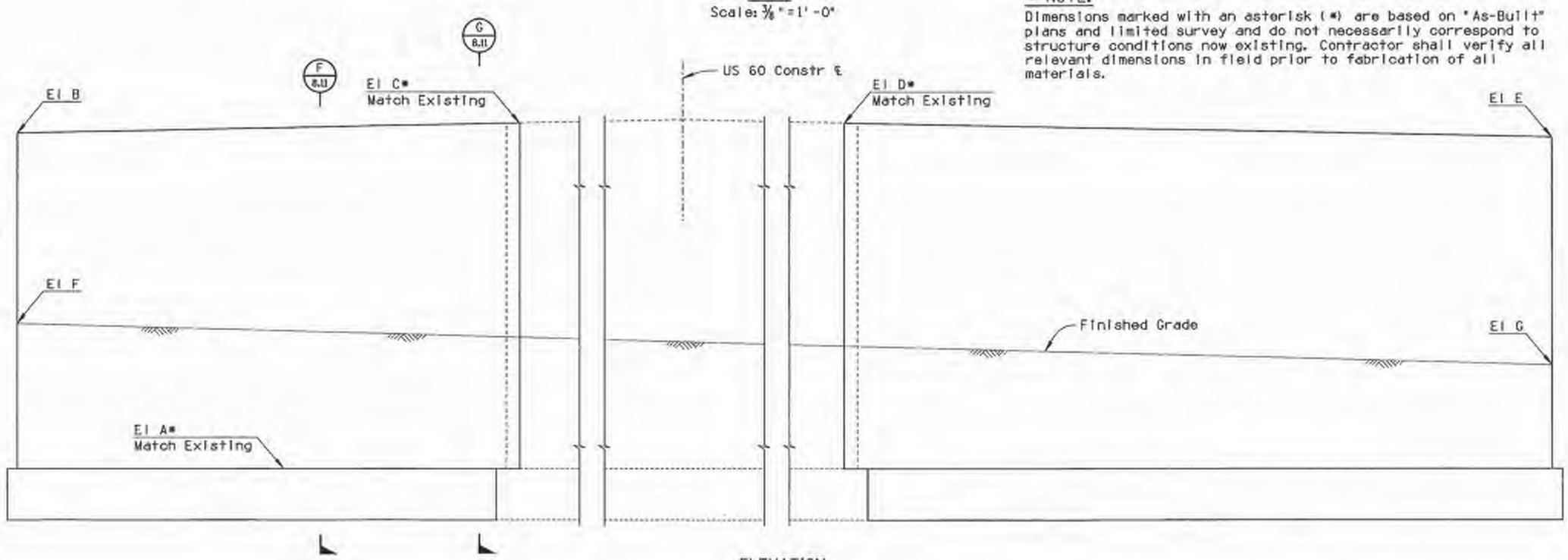

ELEVATION
Scale: ⅜" = 1'-0"

PIER DATA TABLE

LOCATION	STATION	El A	El B	El C*	El D*	El E	El F	El G
PIER 1	1813+19.58	2691.71	2712.95	2712.53	2711.31	2710.59	2698.69	2696.07
PIER 2	1813+59.58	2692.76	2713.95	2713.58	2712.36	2711.60	2699.21	2696.58
PIER 3	1813+99.58	2693.80	2714.96	2714.62	2713.40	2712.60	2699.87	2697.24

	NAME	DATE
DESIGN	MC	08-14
DRAWN	DES	08-14
CHECKED	DEH	08-14

AZTEC

ARIZONA DEPARTMENT OF TRANSPORTATION
INTERMODAL TRANSPORTATION DIVISION
BRIDGE GROUP

STA 1812+
QUEEN CREEK WASH BRIDGE
PIER PLAN & ELEVATION

ROUTE	MILEPOST	STRUCTURE NO.	LOCATION
US 60	226.14	436	SILVER KING SECTION & SUPERIOR STREETS

TRACS NO. H7900 01 C | 060-D(208)S | DWG NO. S-8.10

PLOTTED BY: DSTONE AT 7:41:44 AM 2/12/2015 R:\Phoenix\Projects\AZE1834_On-CallStatewideLocalGovernmentProjectDesign\03_US60SilverKing-SuperiorStreets\CADD\Sheets\Structures\s0436010pr.dgn

REDUCED SIZE
Do Not Scale

REDUCED SIZE
Do Not Scale

FAUSA REGION	STATE	PROJECT NO.	SHEET NO.	TOTAL SHEETS	AS BUILT
9	ARIZ.	060-D(208)S	581	754	10/12/18
		060 PN 222			

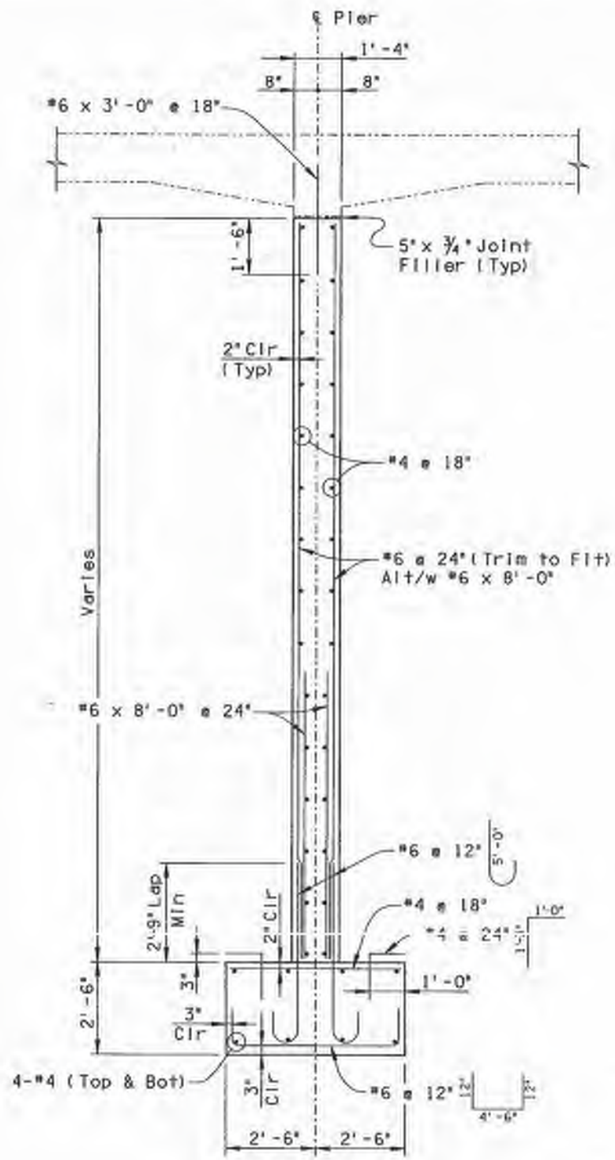

SECTION F
Scale: ½" = 1'-0"

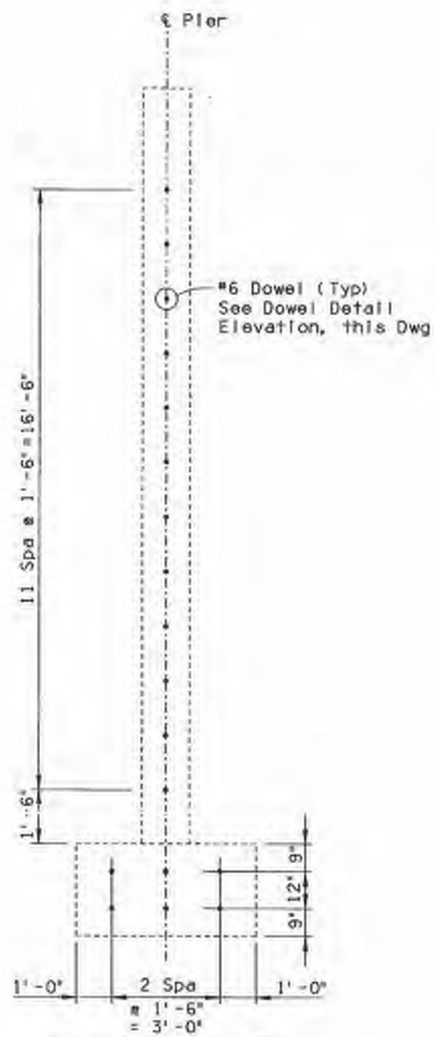

SECTION G
Scale: ½" = 1'-0"

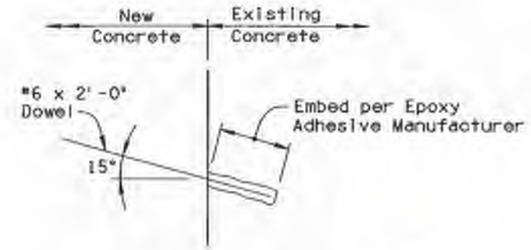

DOWEL DETAIL ELEVATION
No Scale

DOWELING NOTES:

1. Anchor #6 dowel into existing concrete with approved epoxy adhesive. Diameter and depth of hole shall be per epoxy manufacturer recommendation. Anchorage system shall develop the yield strength of the #6 dowel in concrete with a minimum compressive strength f'c=3000 psi.
2. Contractor shall follow epoxy manufacturer recommendations for dowel installation. Contractor shall submit details of the dowel installation, including proposed epoxy adhesive, to the Engineer for review prior to construction.

	NAME	DATE
DESIGN	MC	08-14
DRAWN	DES	08-14
CHECKED	DEH	08-14

AZTEC

ARIZONA DEPARTMENT OF TRANSPORTATION
INTERMODAL TRANSPORTATION DIVISION
BRIDGE GROUP

STA 1812+
QUEEN CREEK WASH BRIDGE
PIER DETAILS

ROUTE	MILEPOST	STRUCTURE NO.	LOCATION
US 60	226.14	436	SILVER KING SECTION & SUPERIOR STREETS

EXPIRES 6/30/2017

DWG NO. S-811

TRACS NO. H7900 01 C

060-D(208)S

679 OF 872

PLOTTED BY: DSTONE AT 7:42:53 AM 2/12/2015 H:\Phoenix\Projects\AZE1034_On-CallStatewideLocalGovernmentProjectDesign\03_US60SilverKing-SuperiorStreets\CADD\Sheets\Structures\a04368llpd.dgn

REDUCED SIZE
Do Not Scale

REDUCED SIZE
Do Not Scale

F.A.H.W.A. REGION	STATE	PROJECT NO.	SHEET NO.	TOTAL SHEETS	AS BUILT
9	ARIZ.	060-D(208)S	582	754	10/12/18
		060 PN 222			

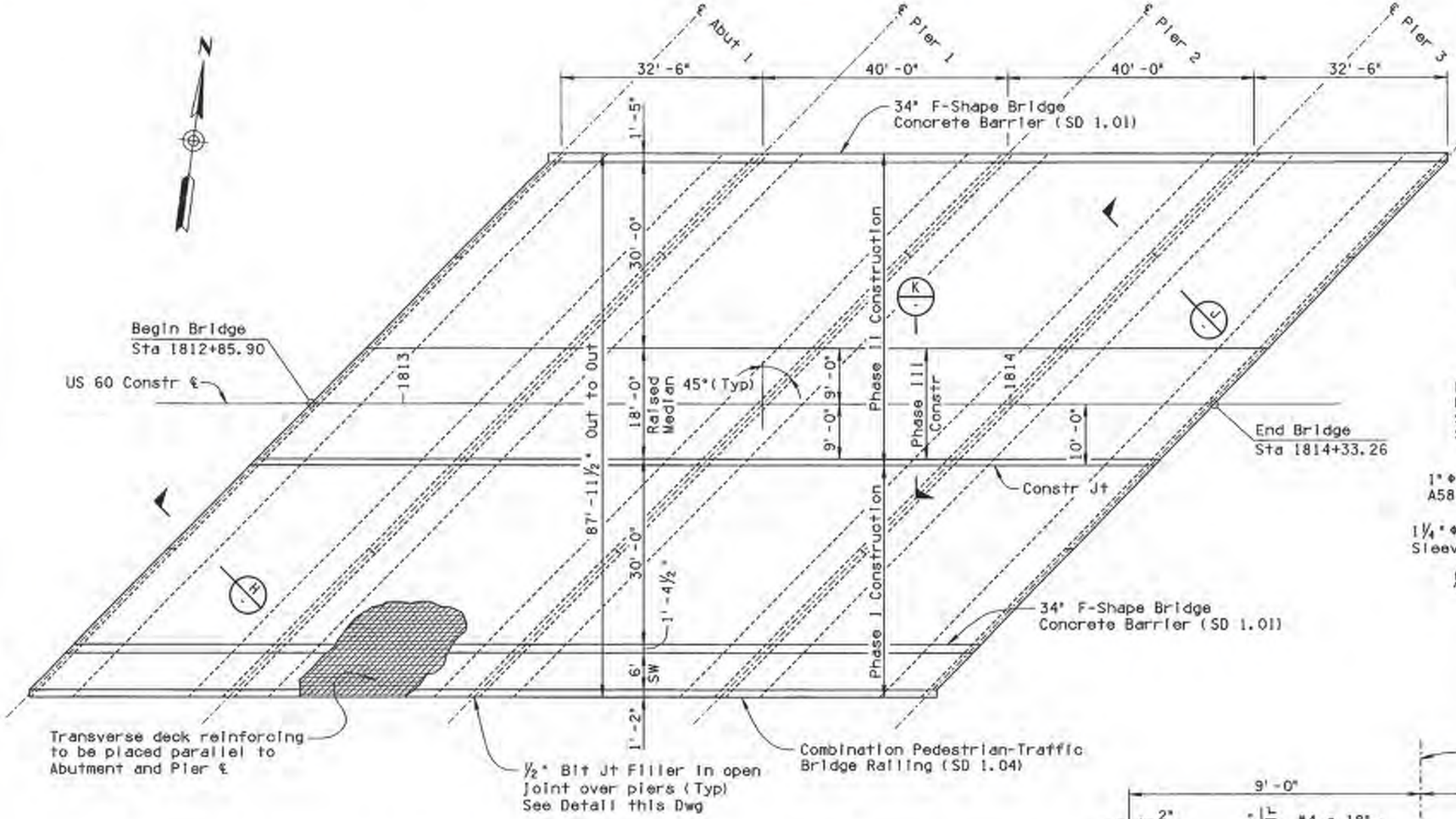

PLAN
Scale: 1"=10'

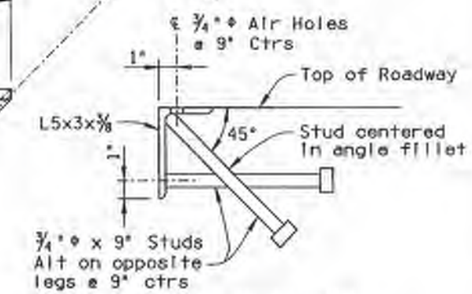

JOINT ARMOR DETAIL
No Scale

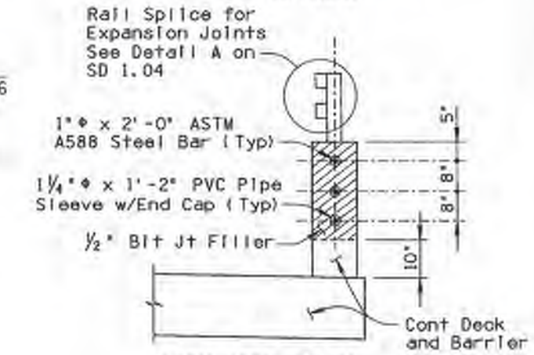

OPEN JOINT DETAIL
No Scale

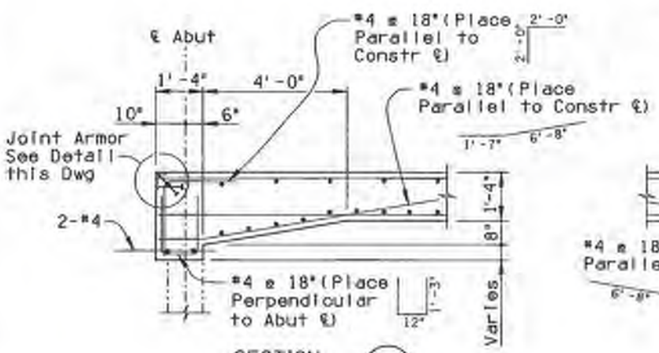

SECTION H
No Scale

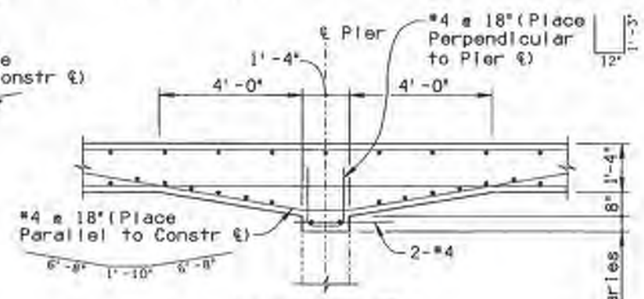

SECTION J
No Scale

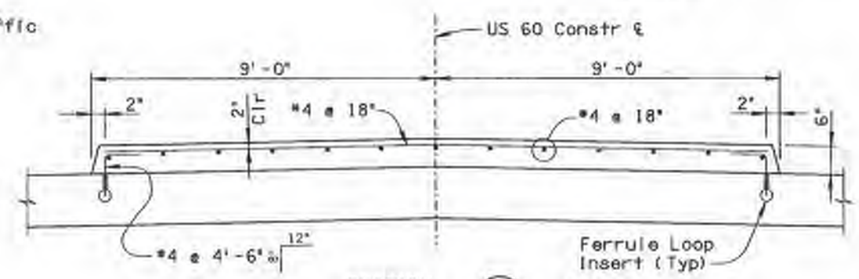

SECTION K
No Scale

NOTE:
Cost of the Ferrule Loop Inserts to be included with the cost of the reinforcing steel.

	NAME	DATE
DESIGN	MC	09-14
DRAWN	DCS	09-14
CHECKED	DEH	09-14

AZTEC

ARIZONA DEPARTMENT OF TRANSPORTATION
INTERMODAL TRANSPORTATION DIVISION
BRIDGE GROUP

STA 1812+
QUEEN CREEK WASH BRIDGE
DECK PLAN & DETAILS

ROUTE	MILEPOST	STRUCTURE NO.	LOCATION
US 60	226.14	436	SILVER KING SECTION & SUPERIOR STREETS

DWG NO. S-812

TRACS NO. H7900 01 C | 060-D(208)S

PLOTTED BY: DSTONE AT 7:44:03 AM 2/12/2015 R:\Phoenix\Projects\AZE1834_On-CallStatewideLocalGovernmentProjectDesign\03_US60SilverKing-SuperiorStreets\CADD\Sheets\Structures\s0436012dp.dgn

REDUCED SIZE
Do Not Scale

F.A.H.W.A. REGION	STATE	PROJECT NO.	SHEET NO.	TOTAL SHEETS	AS BUILT
9	ARIZ.	060-D(208)S	583	754	10/12/18
		060 PN 222			

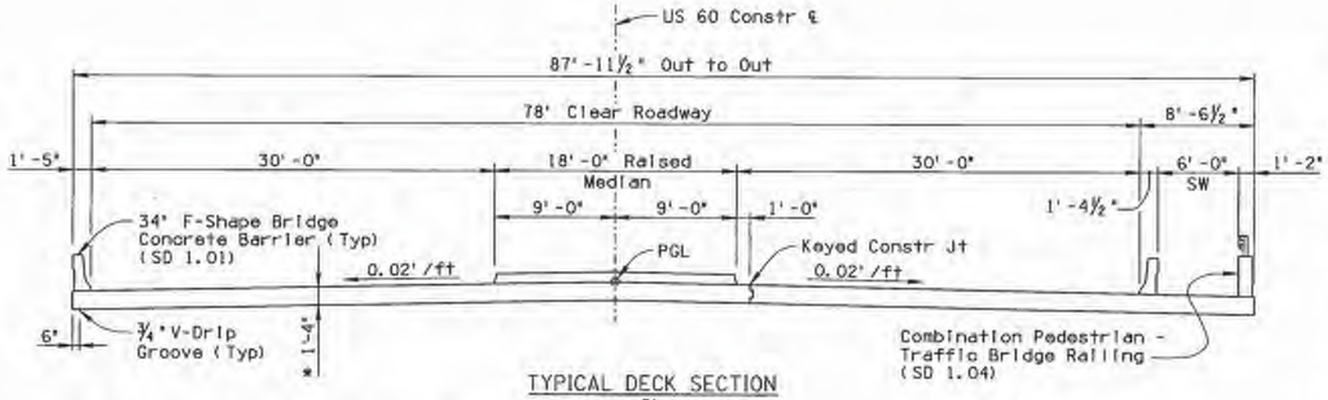

TYPICAL DECK SECTION
Scale: 3/16" = 1'-0"

* Deck thickness varies at piers and abutments.
See Sections H and J

NOTES:

1. All continuous horizontal bars in deck and barriers excluding longitudinal bars in the deck slab may be spliced where required with minimum lap length as specified:
   #4 bars 1'-6" #5 bars 1'-11" #6 bars 2'-3" #7 bars 2'-8"
2. Longitudinal bars in the bottom mat of the deck slab may be spliced over piers. Longitudinal bars in the top mat of the deck slab may be spliced at mid-span with minimum lap length as specified:
   #9 bars 5'-8"
3. Bars shall not be spliced within the required lap length of the adjacent bars.
4. See SD 1.01 for details. These bars are included in the linear foot cost of the barriers.
5. See SD 1.04 for details. These bars are included in the linear foot cost of the bridge railing.
6. These bars are included in the linear foot cost of the barrier. Ferrule loop inserts are included in the linear foot cost of the barrier. Bend bars to conform to face of barrier after threading into ferrule loop insert. Ferrule loop inserts shall be capable of developing the tensile strength of bars threaded into them. Contractor shall submit product information regarding the Ferrule loop inserts to the Engineer for review and approval.
7. Contractor shall submit product information regarding the mechanical bar couplers to the Engineer for review and approval.

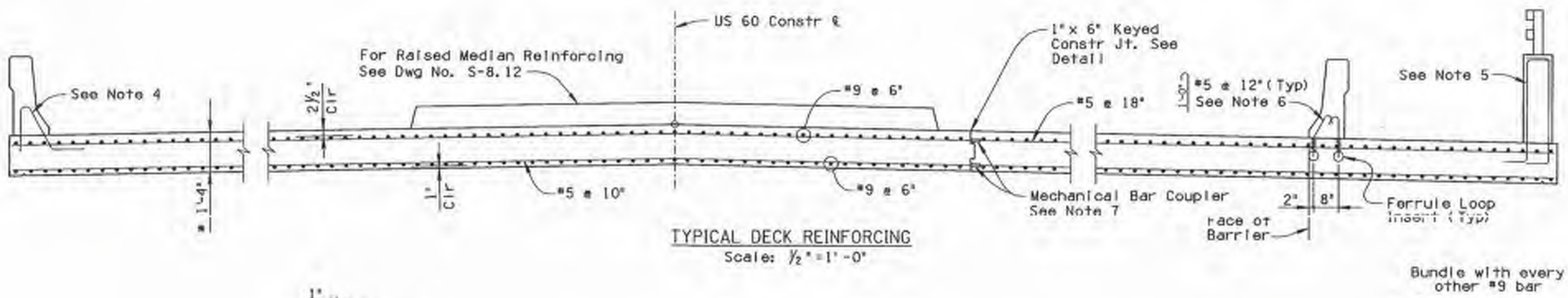

TYPICAL DECK REINFORCING
Scale: ½" = 1'-0"

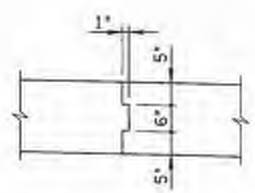

NOTE:
Slab reinforcing not shown for clarity.

KEYED CONSTRUCTION JOINT DETAIL
No Scale

	NAME	DATE
DESIGN	MC	08-14
DRAWN	DES	08-14
CHECKED	DEH	08-14

AZTEC

ARIZONA DEPARTMENT OF TRANSPORTATION
INTERMODAL TRANSPORTATION DIVISION
BRIDGE GROUP

STA 1812+
QUEEN CREEK WASH BRIDGE
TYPICAL DECK SECTION

US 60	226.14	436	SILVER KING SECTION & SUPERIOR STREETS
ROUTE	MILEPOST	STRUCTURE NO.	LOCATION

TRACS NO. H7900 01 C | 060-D(208)S | DWG NO. S-8.13

REDUCED SIZE
Do Not Scale

REDUCED SIZE
Do Not Scale

F.A.H.W.A. REGION	STATE	PROJECT NO.	SHEET NO.	TOTAL SHEETS	AS BUILT
9	ARIZ.	060-D(208)S	584	754	10/12/18
		060 PN 222			

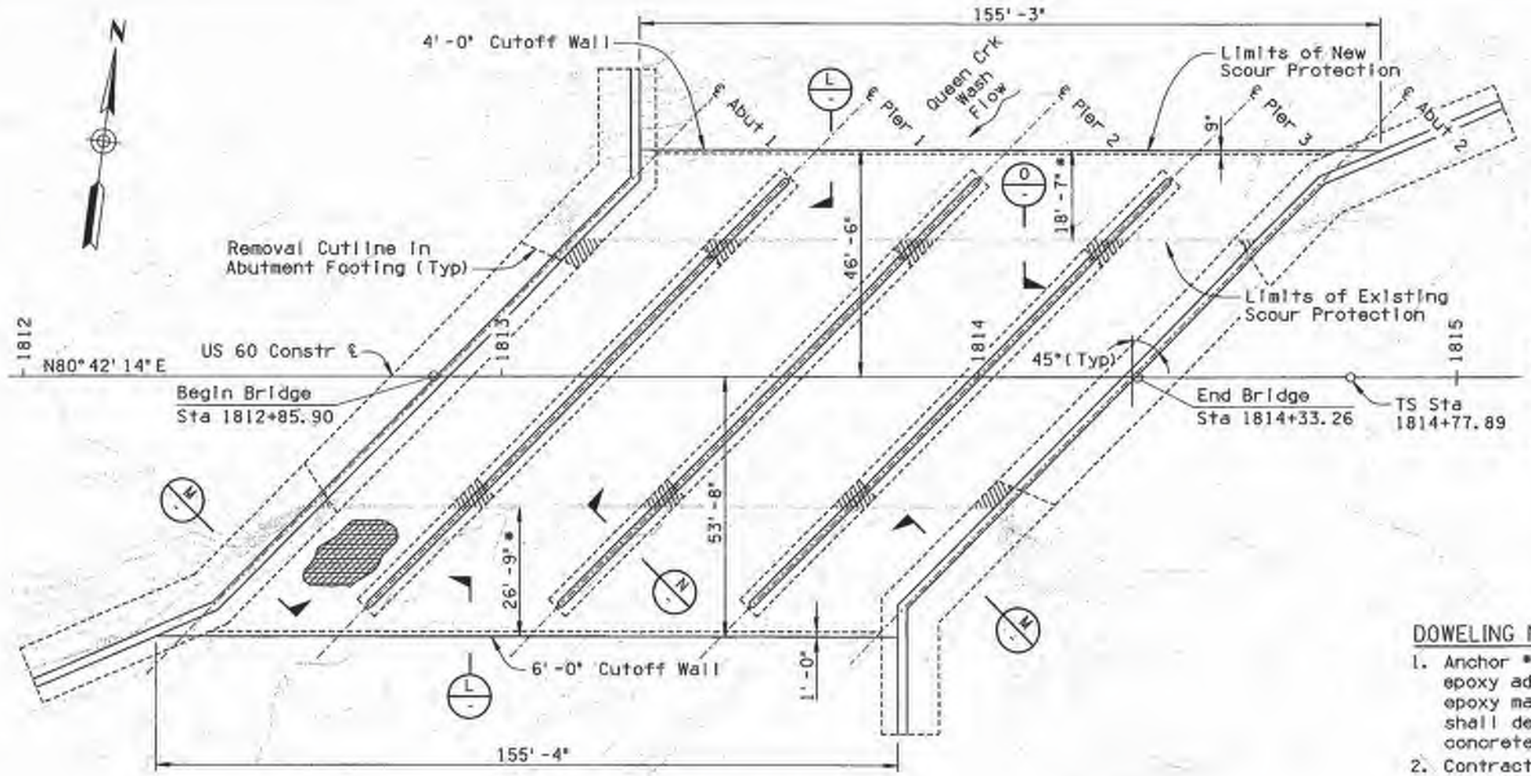

PLAN
Scale: 1"=15'

LEGEND:

Indicates existing scour protection to be removed

NOTES:

1. Dimensions marked with an asterik (*) are based on "As-Built" plans and limited survey and do not necessarily correspond to structure conditions now existing. Contractor shall verify all relevant dimensions in field prior to fabrication of all materials.
2. See Dwg No. S-8.05 for additional removal notes.
3. Transverse slab reinforcing shall be placed parallel to abutment and pier ℄.
4. Lap length for continuous #4 bars shall be 1'-3" minimum.
5. Contractor shall stockpile material excavated from the channel and use the stockpiled material to regrade the channel to existing flow line as directed by the Engineer after construction activity in the channel is complete. No payment will be made for regrading the channel, the cost considered included in the various pay items required to construct the scour protection.

DOWELING NOTES:

1. Anchor #4 dowel into existing concrete with approved epoxy adhesive. Diameter and depth of hole shall be per epoxy manufacturer recommendation. Anchorage system shall develop the yield strength of the #4 dowel in concrete with a minimum compressive strength f'c=3000 psi.
2. Contractor shall follow epoxy manufacturer recommendations for dowel installation. Contractor shall submit details of the dowel installation, including proposed epoxy adhesive, to the Engineer for review prior to construction.

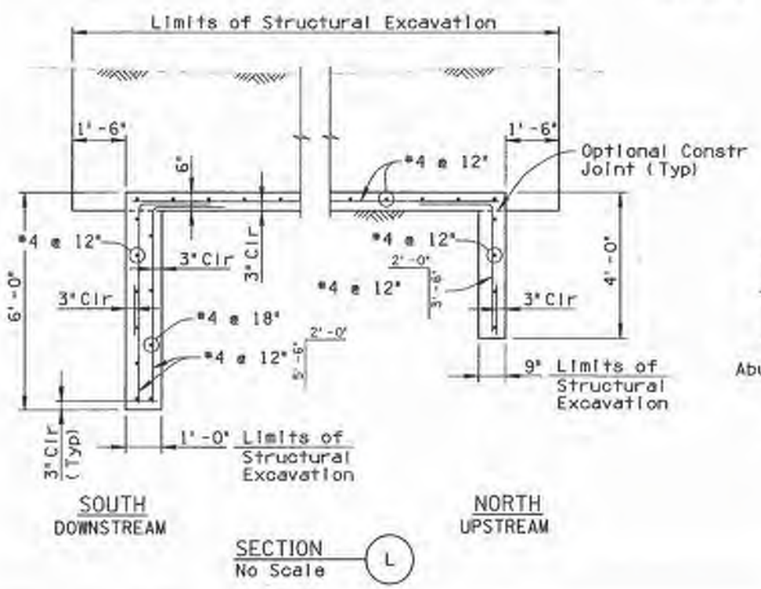

SECTION L
No Scale

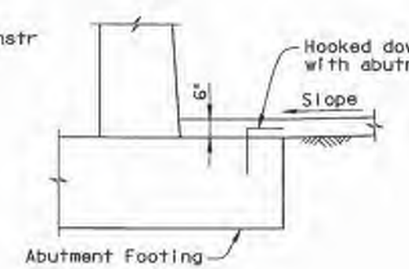

SECTION M
No Scale

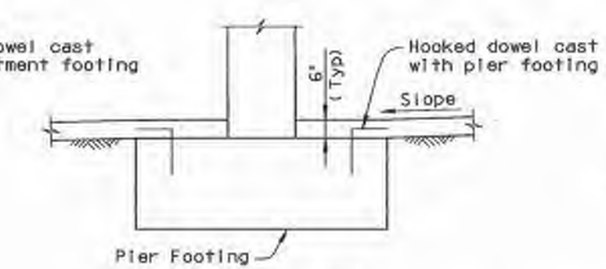

SECTION N
No Scale

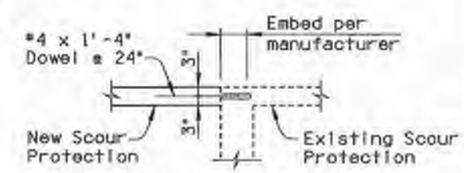

SECTION O
No Scale

	NAME	DATE
DESIGN	MC	08-14
DRAWN	DFS	08-14
CHECKED	DEH	08-14

AZTEC

ARIZONA DEPARTMENT OF TRANSPORTATION
INTERMODAL TRANSPORTATION DIVISION
BRIDGE GROUP

STA 1812+
QUEEN CREEK WASH BRIDGE
SCOUR PROTECTION DETAILS

ROUTE	MILEPOST	STRUCTURE NO.	LOCATION
US 60	226.14	436	SILVER KING SECTION & SUPERIOR STREETS

TRACS NO. H7900 01 C

060-D(208)S

DWG NO. S-8.04

PLOTTED BY: DSTONE AT 7:46:11 AM 2/12/2015 R:\Phoenix\Projects\AZE1834_On-CallStatewideLocalGovernmentProjectDesign\03_US60SilverKing-SuperiorStreets\CADD\Sheets\Structures\s8436M14sp.dgn

REDUCED SIZE
Do Not Scale

REDUCED SIZE
Do Not Scale

F.H.W.A. REGION	STATE	PROJECT NO.	SHEET NO.	TOTAL SHEETS	AS BUILT
9	ARIZ.	060-D(208)S	585	754	10/12/18
060 PN 222					

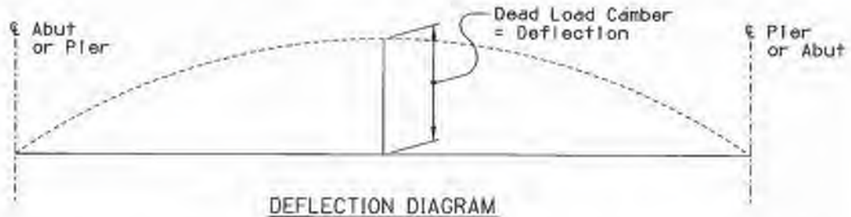

DEFLECTION DIAGRAM
No Scale

SPAN 1 DEFLECTIONS (FT)									
	0.1	0.2	0.3	0.4	0.5	0.6	0.7	0.8	0.9
FINAL	0.032	0.061	0.081	0.089	0.084	0.069	0.047	0.025	0.008

SPAN 2 DEFLECTIONS (FT)									
	0.1	0.2	0.3	0.4	0.5	0.6	0.7	0.8	0.9
FINAL	0.005	0.022	0.045	0.064	0.072	0.066	0.049	0.026	0.007

SPAN 3 DEFLECTIONS (FT)									
	0.1	0.2	0.3	0.4	0.5	0.6	0.7	0.8	0.9
FINAL	0.007	0.026	0.049	0.066	0.072	0.064	0.045	0.022	0.005

SPAN 4 DEFLECTIONS (FT)									
	0.1	0.2	0.3	0.4	0.5	0.6	0.7	0.8	0.9
FINAL	0.008	0.025	0.047	0.069	0.084	0.089	0.081	0.061	0.032

DEFLECTION AND CAMBER NOTES:

1. Deflection is due to self weight of the deck slab, median, barriers, and railing, and includes the effects of long term creep. The weight of future wearing surface is not included.
2. Deflection and camber is given in feet at the tenth points of span.

SCREED ELEVATIONS											
	℄ ABUT 1	0.1	0.2	0.3	0.4	0.5	0.6	0.7	0.8	0.9	℄ PIER 1
LEFT EDGE OF DECK	2714.38	2714.49	2714.60	2714.71	2714.79	2714.87	2714.94	2715.00	2715.06	2715.12	2715.20
PGL	2714.17	2714.28	2714.39	2714.50	2714.59	2714.66	2714.73	2714.79	2714.85	2714.91	2714.99
RIGHT EDGE OF DECK	2712.02	2712.14	2712.25	2712.35	2712.44	2712.51	2712.58	2712.64	2712.70	2712.77	2712.84
	℄ PIER 1	0.1	0.2	0.3	0.4	0.5	0.6	0.7	0.8	0.9	℄ PIER 2
LEFT EDGE OF DECK	2715.20	2715.30	2715.42	2715.54	2715.66	2715.77	2715.87	2715.95	2716.03	2716.11	2716.20
PGL	2714.99	2715.09	2715.21	2715.33	2715.45	2715.56	2715.66	2715.74	2715.82	2715.90	2715.99
RIGHT EDGE OF DECK	2712.84	2712.94	2713.06	2713.19	2713.31	2713.42	2713.51	2713.59	2713.67	2713.75	2713.85
	℄ PIER 2	0.1	0.2	0.3	0.4	0.5	0.6	0.7	0.8	0.9	℄ PIER 3
LEFT EDGE OF DECK	2716.20	2716.31	2716.43	2716.56	2716.67	2716.78	2716.87	2716.95	2717.03	2717.12	2717.21
PGL	2715.99	2716.10	2716.22	2716.35	2716.46	2716.57	2716.66	2716.74	2716.82	2716.91	2717.00
RIGHT EDGE OF DECK	2713.85	2713.95	2714.07	2714.20	2714.32	2714.42	2714.52	2714.60	2714.67	2714.76	2714.85
	℄ PIER 3	0.1	0.2	0.3	0.4	0.5	0.6	0.7	0.8	0.9	℄ ABUT 2
LEFT EDGE OF DECK	2717.21	2717.30	2717.40	2717.50	2717.61	2717.70	2717.79	2717.87	2717.93	2717.98	2718.03
PGL	2717.00	2717.09	2717.19	2717.29	2717.40	2717.50	2717.58	2717.66	2717.72	2717.77	2717.82
RIGHT EDGE OF DECK	2714.85	2714.94	2715.04	2715.15	2715.25	2715.35	2715.43	2715.51	2715.57	2715.62	2715.67

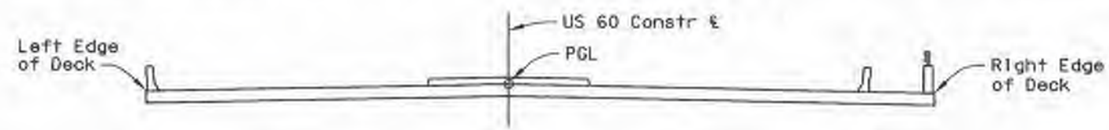

SCREED ELEVATIONS NOTES:

1. Screed Elevations are tabulated on the Screed Elevations Table and shall be used for setting screeds (DO NOT USE FINISHED GRADE ELEVATIONS FOR SETTING SCREEDS).
2. The Screed Elevations include an allowance for deflections due to dead load. No allowance has been made for falsework and shoring settlement or deflection.
3. Top of formwork elevation is equal to screed elevation minus the slab thickness.

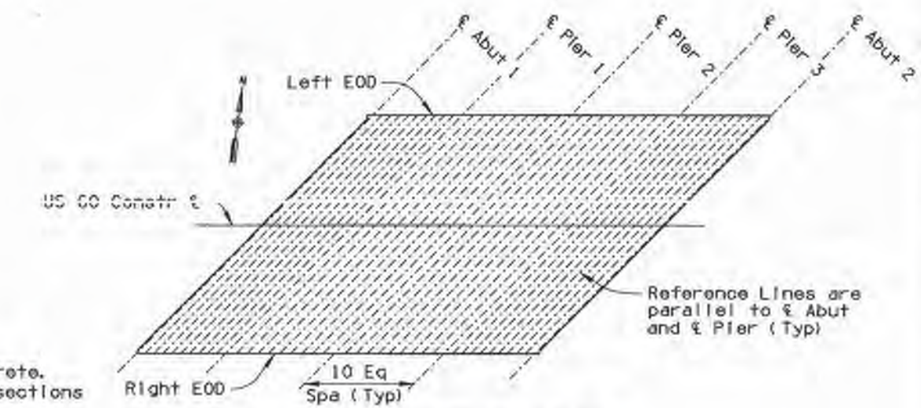

SCREED REFERENCE LINE PLAN
No Scale

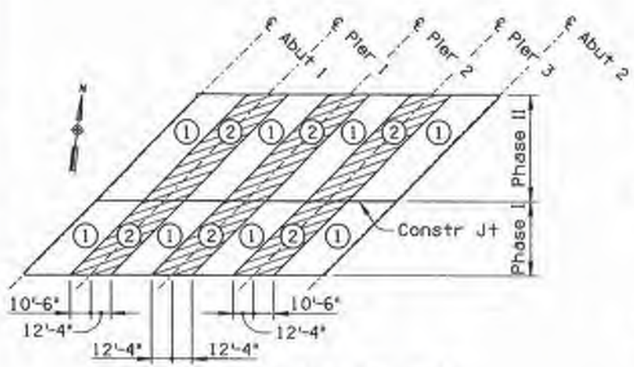

DECK POURING SEQUENCE
No Scale

POURING SEQUENCE NOTES:

1. Numbers (1) and (2) indicate placing sequence of deck concrete. Pour (2) section a minimum of 12 hours after adjacent (1) sections have been poured.
2. Sections (1) and (2) may be poured consecutively but only in the direction from (1) to (2) and a minimum of 12 hours after adjacent (1) section has been poured, unless the Contractor's deck pour schedule and mix design is submitted demonstrating that the rate of pour is sufficient to place from (1) to (2) and completely through the adjacent (1) prior to initial set of (2).
3. The Contractor shall submit a deck pour schedule to the Engineer for approval prior to placing concrete.

	NAME	DATE
DESIGN	MC	08-14
DRAWN	DCS	08-14
CHECKED	DEH	08-14

AZTEC

ARIZONA DEPARTMENT OF TRANSPORTATION
INTERMODAL TRANSPORTATION DIVISION
BRIDGE GROUP

STA 1812+
QUEEN CREEK WASH BRIDGE
CAMBER DETAILS & SCREED ELEVATIONS

US 60	226.14	436
ROUTE	MILEPOST	STRUCTURE NO.

LOCATION
SILVER KING SECTION & SUPERIOR STREETS

DWG NO. S-8.15

TRACS NO. H7900 01 C

060-D(208)S

PLOTTED BY: DSTONE AT 7:47:26 AM 2/12/2015 R:\Phoenix\Projects\AZE1034_On-CallStatewideLocalGovernmentProjectDesign\03_US60SilverKing-SuperiorStreets\CADD\Sheets\Structures\a843681sca.dgn

REDUCED SIZE
Do Not Scale

REDUCED SIZE
Do Not Scale

F.H.W.A. REGION	STATE	PROJECT NO.	SHEET NO.	TOTAL SHEETS	AS BUILT
9	ARIZ.	060-D-(208)S	586	754	10/12/18
		060 PN 222			

NOTES:

1. INFORMATION CONTAINED ON FOUNDATION DATA SHEETS IS MADE AVAILABLE TO PROSPECTIVE BIDDERS FOR INFORMATION PURPOSES ONLY AND IS NOT TO BE CONSIDERED A PART OF THE CONTRACT PAPERS.

2. INFORMATION IS DEVELOPED AS ACCURATELY AS POSSIBLE BY METHODS UTILIZED. HOWEVER, THE STATE ACCEPTS NO RESPONSIBILITY FOR ANY CONDITIONS ENCOUNTERED WHICH MAY BE AT VARIANCE FROM INFORMATION CONTAINED HEREIN.

3. GROUNDWATER IS INDICATED HEREIN ONLY WHEN FOUND DURING THE FOUNDATION INVESTIGATION AND REPRESENTS THAT CONDITION ONLY ON THE DATE OF THE INVESTIGATION.

4. CLASSIFICATION OF MATERIALS IS IN GENERAL ACCORDANCE WITH AASHTO "MANUAL ON FOUNDATION INVESTIGATIONS" AND UNIFIED SOIL CLASSIFICATION SYSTEM, AND IS BASED ON FIELD INSPECTION AND IS NOT TO BE CONSTRUED TO IMPLY MECHANICAL ANALYSIS.

5. TUBE SAMPLERS ARE DRIVEN WITH 140-POUND HAMMER WITH 30" FREE-FALL, NO CUSHION.

6. FOUNDATION INVESTIGATIONS WERE CONDUCTED BY AMEC ENVIRONMENT & INFRASTRUCTURE, INC.

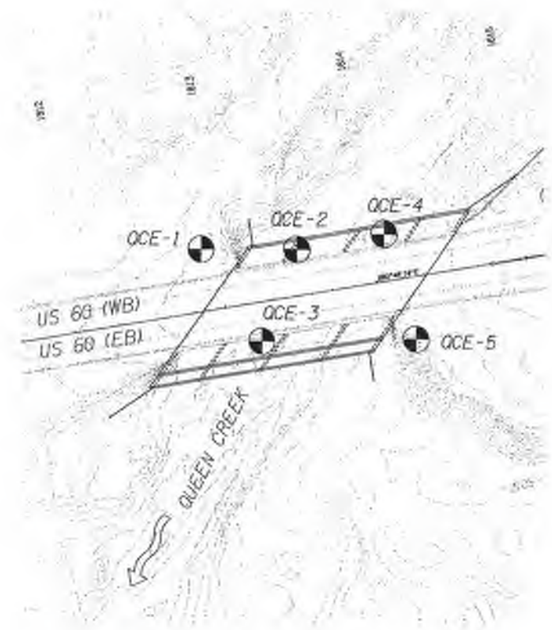

N

Legend

QCE-1 Boring Identifier & Location

	NAME	DATE
DESIGN	RG	11/14
DRAWN	GWH	11/14
CHECKED	DMF	11/14

amec Environment & Infrastructure, Inc. 6001 East Washington Street Suite 100 Phoenix, Arizona (602) 733-6000

ARIZONA DEPARTMENT OF TRANSPORTATION
INTERMODAL TRANSPORTATION DIVISION
BRIDGE GROUP

STA 1812+
QUEEN CREEK WASH BRIDGE
FOUNDATION DATA SHEET 1

ROUTE	MILEPOST	STRUCTURE NO.	LOCATION
US 60	223.9	436	SILVER KING SECTION & SUPERIOR STREETS

TRACS NO. H7900 01C | 060-D-(208)S

DWG. SF-8.01

684 OF 872

REDUCED SIZE
Do Not Scale

REDUCED SIZE
Do Not Scale

F.A.H.A. REGION	STATE	PROJECT NO.	SHEET NO.	TOTAL SHEETS	AS BUILT
9	ARIZ.	060-D-(208)S	587	754	10/12/18
		060 PN 222			

LOG OF TEST BORING NO. QCE-1

JOB NO. 17-2012-4011 DATE 9-17-12 thru 9-19-12

RIG TYPE: Bucky Track-mounted
METHOD: HQ-3 Wireline Coring
OPERATOR: CRST Subsurface, Inc.
LOGGED BY: Wade Cosansie
LOCATION: Queen Creek East Bridge - Westbound 1
STA/OFFSET: WB Station 1812+90, 30' L
ELEVATION: 2717'
DATUM: NGVD Base Maps

Boring Diameter - Size and (in) Rate (min/foot)	Depth in Feet	Sample	Sample Type	Unconfined Compressive or Point Load Index (psi)	% Core Recovery	% Drilling Fluid Ret.	Rock Quality Designation (RQD)	Discontinuities: Spacing (Wide – Close)	Discontinuities: Orientation (Horiz – Vert)	Condition	Breaking and/or Fabric	Weathering or USCS Symbol	Rock Type & Remarks
6/7/13 HWT 2.5	0		HWT	N/A			N/A	NO RECOVERY	NO RECOVERY	N/A	N/A	FC	Man-made FILL (Structural Bridge Backfill) CLAYEY SAND, some predominently coarse grained, subangular gravel, predominently fine to medium grained, subangular to subrounded sand, uncemented, some calcium carbonate, low to medium plasticity, brown to dark brown note: SPT blow counts at: 10-13-15 at 2.1' & 16-16-18 at 7.1' note: increase in fines with depth
N/A		S											
2.8		HWT											
HQ 1.0	5		S					N/A	N/A				note: clayey sand with gravel below 7.0'
N/A			HQ		70	100							note: SPT blow counts at: 23-22-14 at 8.9'
			S									SC/GC	CLAYEY SAND & GRAVEL, well graded, subangular to angular gravel & predominently medium to coarse grained, subangular sand, medium plasticity, dark brown.
1.5	10		HQ		25								
												SC to CL	Native CLAYEY SAND TO SANDY CLAY, occasional coarse grained, subangular to subrounded gravel, predominently fine to medium grained, subangular to subrounded sand, uncemented, some calcium carbonate, low to medium plasticity, brown to dark brown. note: SPT blow counts at: 8-8-13 at 13.9'
N/A		S											
HWT 3.9	15		HWT					NO RECOVERY	NO RECOVERY				
6/10 N/A		S											
3.8		HWT					0						note: SPT blow counts at: 6-14-18 at 22.1' note: decrease of sand below 27.0', thin gray to light green lenses along with occasional white nodules, weakly cemented at 27.0'
6/10 HWT	25											CL	SANDY CLAY, some to considerable fine grained, subangular to subrounded sand, uncemented, considerable calcium carbonate, medium to high plasticity, brown to light brown with occasional white to light green lenses note: some small diameter voids note: SPT blow counts at: 6-14-18 at 22.1'
N/A		U											
3.8		HWT											
6.4		U											note: ring blow counts at: 73 at 28.1'
	30									None	L to MD	SM	Calcareous MUDSTONE, very soft, brown
N/A		S											note: occasional very thin, low to medium plasticity silt lenses below 32.0'
7.3		HWT											note: SPT blow counts at: 13-23-41 at 32.1'
N/A	35	S											note: SPT blow counts at: 10-24-43 at 37.1'
8.9		HWT											
6/10 3.9	40	U											note: ring blow counts at: 100/1" at 42.1'
			HQ		50		0			Switch to Siltstone			note: considerable black manganese-oxide staining on joint surfaces
5.3			HQ		100		0						
				1372									
6.7	45	S		N/A			N/A		N/A				note: SPT blow counts at: 21-24-50/4 1/2" at 46.9'
	50												

LOG OF TEST BORING NO. QCE-1 (CONTINUED)

JOB NO. 17-2012-4011 DATE 9-17-12 thru 9-19-12

RIG TYPE: Bucky Track-mounted
METHOD: HQ-3 Wireline Coring
OPERATOR: CRST Subsurface, Inc.
LOGGED BY: Wade Cosansie
LOCATION: Queen Creek East Bridge - Westbound 1
STA/OFFSET: WB Station 1812+90, 30' L
ELEVATION: 2717'
DATUM: NGVD Base Maps

Boring Diameter - Size and (in) Rate (min/foot)	Depth in Feet	Sample	Sample Type	Unconfined Compressive or Point Load Index (psi)	% Core Recovery	% Drilling Fluid Ret.	Rock Quality Designation (RQD)	Discontinuities: Spacing (Wide – Close)	Discontinuities: Orientation (Horiz – Vert)	Condition	Breaking and/or Fabric	Weathering or USCS Symbol	Rock Type & Remarks
HQ 6/13 4.7	50		HQ		90		45			Smooth to Slight	Hard to Mod. exc. 1	SM to Clay Co. zone	Calcareous MUDSTONE, continued note: very soft
										Slickensided			note: some calcareous siltstone & claystone interbeds
N/A		S			N/A		N/A		N/A	Smooth			note: SPT blow counts at: 15-33-45 at 53.9'
	55												note: slickensides from 55.0' to 58.0'
			HQ		100		85			Slickensided			
										Smooth			
										Slickensided			
										Smooth			
N/A		S			N/A		N/A		N/A				note: SPT blow counts at: 17-41-50/4 1/2" at 58.9'
4.8	60		HQ		80		55						
				1023									note: grayish-brown siltstone interbed at 61.3'
N/A		S			N/A		N/A						note: SPT blow counts at: 21-34-50/5" at 63.9'
	65												
	70												Stopped HQ Coring at 63.9' Sampler refused at 65.3' Backfilled borehole with bentonite chips * note: water used while coring, therefore unknown if groundwater encountered
	75												

DIAMETER		
DEPTH (ft)	DIAMETER	DATE
	* NOTE	

BORING DESIGNATION
HWT – 4.5" O.D. Coring
RW – 4.25" O.D. Wireline Rock Coring
HQ – 3.78" O.D. Wireline Rock Coring
NQ – 2.98" O.D. Wireline Rock Coring
S – 2" O.D./1.38" I.D. Tube Sample
B – Bulkfoil Bulk Sample

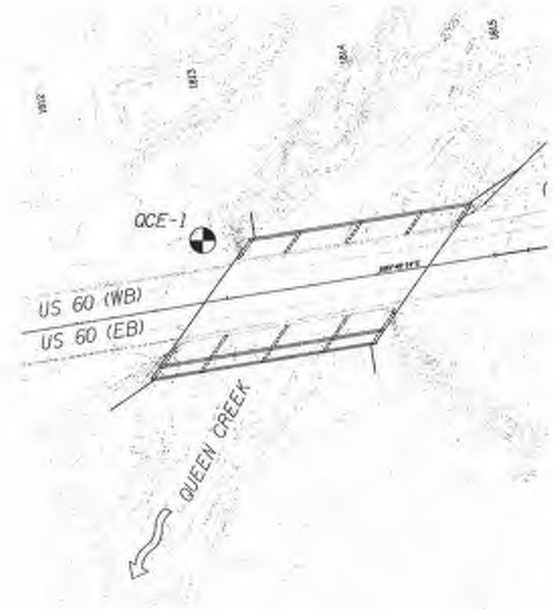

N

Legend

QCE-1 Boring Identifier & Location

	NAME	DATE
DESIGN	PB	11/14
DRAWN	GWH	11/14
CHECKED	DMF	11/14

amec Environment & Infrastructure, Inc. 4600 East Washington Street Suite 300 Phoenix, Arizona (602) 133-8000

ARIZONA DEPARTMENT OF TRANSPORTATION
INTERMODAL TRANSPORTATION DIVISION
BRIDGE GROUP

STA 1812+
QUEEN CREEK WASH BRIDGE
FOUNDATION DATA SHEET 2

ROUTE	MILEPOST	STRUCTURE NO.	LOCATION
US 60	223.9	436	SILVER KING SECTION & SUPERIOR STREETS

37284 DANIEL M. FRECHETTE 4-2-2015 ARIZONA, U.S.A.

DWG. SF-8.02

TRACS NO. H7900 01C | 060-D-(208)S

REDUCED SIZE
Do Not Scale

F.H.W.A. REGION	STATE	PROJECT NO.	SHEET NO.	TOTAL SHEETS	AS BUILT
9	ARIZ.	060-D-(208)S	588	754	10/12/18

060 PN 222

LOG OF TEST BORING NO. QCE-2

JOB NO. 17-2012-4011 DATE 10-8-12 to 10-9-12

RIG TYPE: Bucyrus Truck-mounted
METHOD: HQ-3 Wireline Coring
OPERATOR: CRUX Subsurface, Inc.
LOGGED BY: Nicole Cusanelli
LOCATION: Queen Creek East Bridge - Pier 1
STA/OFFSET: WB Station 1812+50, 25' L
ELEVATION: 2351'
DATUM: ADOT Bridge Maps

Boring Overburden Hole Diameter (Inches)	Depth in Feet	Sample	Sample Type	Uncorrected Compression or Point Load Index/Test (psi)	% Core Recovery	% Drilling Fluid Ret.	Rock Quality Designation (RQD)	Discontinuities: Spacing (Wide – Close) 1 2 3 4 5	Discontinuities: Orientation (Horiz – Vert) H 45 V	Condition	Bedding and/or Foliation	Weathering or USCS (Soils)	Rock Type & Remarks
10 7/8 4.3	0		1001		0	100	N/A	NO DISCONTINUITIES	NO DISCONTINUITIES	N/A	N/A	CP	Alluvium – Channel Deposit SAND, GRAVEL, COBBLES & BOULDERS note: boulder up to 1.5' in diameter from 1.0' to 2.0'
	5				0							SP	SAND WITH GRAVEL & SILT, some to considerable predominently coarse grained, subangular gravel, predominently fine to medium grained, subangular to subrounded sand, unconsolidated, nonplastic, brown to gray note: SPT blow counts at: 22-17-38 at 4.5'
			1001		0	15							
4.3	10		1001		100			N/A	N/A				note: SPT blow counts at: 50/3" at 10.0'
5.2			1001		25								note: concrete with rebar encountered from approximately 10.3' to 12.0' note: drilled quickly with little resistance below 12.0'
						0							
						100							
5.3	15		1001										note: SPT blow counts at: 25-20-33 at 15.2'
			1001		100		36			Smth Stn	Mod-Int	SW to MSW	Nolive Colorado MUDSTONE, soft to very soft, brown with occasional thin black lenses
4.7			1001		N/A		N/A	N/A	N/A				note: black manganese-oxide stained desiccation cracks note: material breaks down to medium to high plasticity clay
			HQ	44	90		55						note: SPT blow counts at: 13-26-36 at 21.2'
10 7/8 HQ	25									Smth planar Stn	Mod-Int	SW	
10 7/8 4.5			1001		N/A		N/A	N/A	N/A				note: SPT blow counts at: 7-19-32 at 26.2'
			HQ		100		0						note: soft to very soft note: light brown note: desiccation cracks stained with manganese-oxide
	30												
4.6			1001		N/A		N/A	N/A	N/A				note: SPT blow counts at: 12-21-40 at 31.2'
			HQ		95		15		NONE	N/A			note: the mudstone is a massive unit with few discontinuities below a depth of 32.0'. The RQD values below this depth are primarily based on the presence of soft zones within the rock mass rather than the presence of discontinuities.
	35			58									
5.0			1001		N/A		N/A	N/A	N/A				note: SPT blow counts at: 13-24-40 at 36.2'
			HQ		100		70						
	40												
4.4			1001		N/A		N/A	N/A	N/A				note: SPT blow counts at: 11-23-40 at 41.2'
			HQ		100		45						
	45			114									
4.1			1001		N/A		N/A	N/A	N/A				note: SPT blow counts at: 5-21-28 at 46.2'
			HQ		95		25						
	50												

LOG OF TEST BORING NO. QCE-2 (CONTINUED)

JOB NO. 17-2012-4011 DATE 10-8-12 to 10-9-12

RIG TYPE: Bucyrus Truck-mounted
METHOD: HQ-3 Wireline Coring
OPERATOR: CRUX Subsurface, Inc.
LOGGED BY: Nicole Cusanelli
LOCATION: Queen Creek East Bridge - Pier 1
STA/OFFSET: WB Station 1812+50, 25' L
ELEVATION: 2351'
DATUM: ADOT Bridge Maps

Boring Overburden Hole Diameter (Inches)	Depth in Feet	Sample	Sample Type	Uncorrected Compression or Point Load Index/Test (psi)	% Core Recovery	% Drilling Fluid Ret.	Rock Quality Designation (RQD)	Discontinuities: Spacing (Wide – Close) 1 2 3 4 5	Discontinuities: Orientation (Horiz – Vert) H 45 V	Condition	Bedding and/or Foliation	Weathering or USCS (Soils)	Rock Type & Remarks
10 7/8 HQ	50			124		100				N/A	Mod-Int	SW	Colorado MUDSTONE, continued note: SPT blow counts at: 10-12-36 at 51.2'
3.8			5		N/A		N/A	N/A	N/A				note: soft to very soft
			HQ		95		43						note: light brown
	55												
			5		N/A		N/A	N/A	N/A				note: SPT blow counts at: 4-16-33 at 56.2'
	60												Stopped HQ Coring at 56.2' Sampler stopped at 57.7' Backfilled borehole with bentonite chips * Because water was injected into the boring while drilling, it is not known if groundwater was encountered.
	65												
	70												
	75												

GROUNDWATER

	DEPTH (ft)	HOLE	DATE
GW		* none	

BORING OPERATION
HWT – 4.5" O.D. Casing
RW – 4.25" O.D. Wireline Rock Coring
HQ – 3.78" O.D. Wireline Rock Coring
NQ – 2.8" O.D. Wireline Rock Coring
S – 3" O.D./1.38" I.D. Tube Sampler
D – Disturbed Bulk Sample

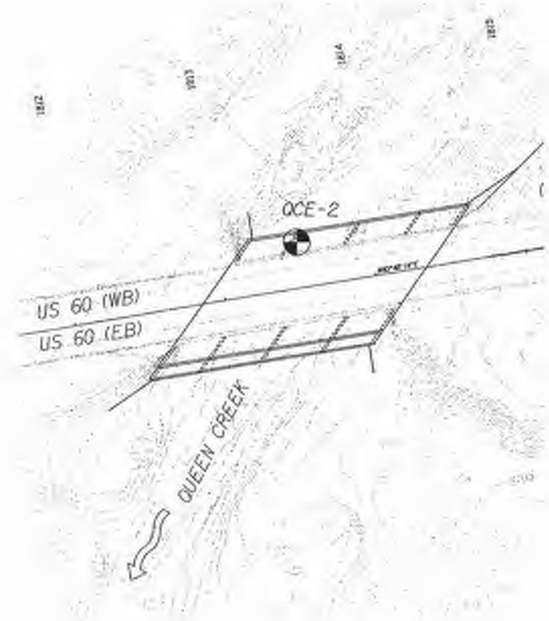

N

Legend

QCE-2 Boring Identifier & Location

	NAME	DATE
DESIGN	PSS	11/14
DRAWN	CWH	11/14
CHECKED	DMF	11/14

amec Environment & Infrastructure, Inc. 4530 East Washington Street Suite 100 Phoenix, Arizona (602) 733-6000

ARIZONA DEPARTMENT OF TRANSPORTATION
INTERMODAL TRANSPORTATION DIVISION
BRIDGE GROUP

STA 1812+
QUEEN CREEK WASH BRIDGE
FOUNDATION DATA SHEET 3

LOCATION: SILVER KING SECTION & SUPERIOR STREETS

US 60	223.9	436
ROUTE	MILEPOST	STRUCTURE NO.

TRACS NO. H7900 01C | 060-D-(208)S

37284 DANIEL N. FONTAINE 4-2-2015 ARIZONA, U.S.A.
EXPIRES 12/31/2015

DWG. SF-8.03

REDUCED SIZE
Do Not Scale

F.A.H.W.A. REGION	STATE	PROJECT NO.	SHEET NO.	TOTAL SHEETS	AS BUILT
9	ARIZ.	060-D-(208)S	589	754	10/12/18
		060 PN 222			

LOG OF TEST BORING NO. QCE-3

JOB NO. 17-2012-4011 DATE 10-8-12 (Rev. 10-10-12)

RIG TYPE: Bobcat Track-mounted
METHOD: HQ-3 Wireline Coring
OPERATOR: CRAM Subsurface, Inc.
LOGGED BY: Kevin Thompson
LOCATION: Queen Creek East Bridge - Pier 2
STA/OFFSET: MB Station 1814+10, 25' L
ELEVATION: 2397'
DATUM: ADOT Bridge Maps

Rock Type & Remarks

Possible Man-made Fill
SAND, GRAVEL & COBBLES, trace to some subrounded boulders up to 3.0' in diameter at surface, predominantly fine to coarse grained sand, predominantly coarse grained gravel & cobbles, uncemented, nonplastic, brown & gray

note: SPT blow counts at: 30/4.5' at 4.5

note: pieces of concrete were encountered from 7.5' to 11.2'

note: SPT blow counts at: 12-21-26 at 11.3'

Notes
Calcareous
MUDSTONE, soft to very soft, brown

note: breaks down to medium to high plasticity clay

note: dessication cracks stained with manganese-oxide from 15.0' to 38.0'

note: SPT blow counts at: 3-7-16 at 16.5'

note: some green staining & small diameter roots along dessication cracks

note: SPT blow counts at: 15-38-50/ 1/2" at 21.5'

note: soft to very soft, brown

note: material breaks down to medium to high plasticity clay

note: SPT blow counts at: 14-23-50/5.5' at 26.5'

note: SPT blow counts at: 10-23-50/5' at 31.5'

note: slickensides at 33.5' & 33.6'

note: SPT blow counts at: 24-50/5.5' at 36.5'

note: RQD values from 38.0' to 52.5' are based on zones of soft rock within the rock mass

note: SPT blow counts at: 15-46-50/4.5' at 41.5'

note: SPT blow counts at: 15-45-50/3.5' at 46.5'

LOG OF TEST BORING NO. QCE-3 (CONTINUED)

JOB NO. 17-2012-4011 DATE 10-8-12 (Rev. 10-10-12)

RIG TYPE: Bobcat Track-mounted
METHOD: HQ-3 Wireline Coring
OPERATOR: CRAM Subsurface, Inc.
LOGGED BY: Kevin Thompson
LOCATION: Queen Creek East Bridge - Pier 2
STA/OFFSET: MB Station 1814+10, 25' L
ELEVATION: 2397'
DATUM: ADOT Bridge Maps

Rock Type & Remarks

Calcareous
MUDSTONE, continued
note: soft to very soft, light brown

note: SPT blow counts at: 10-30-50/4" at 51.5'

note: dessication cracks partially stained with manganese-oxide below 56.0'

note: SPT blow counts at: 30-50/4" at 55.5'

Stopped HQ Coring at 55.5'
Sampler refused at 55.5'
Installed piezometer

* Because water was injected into the boring while drilling, it is not known if groundwater was encountered.

GROUNDWATER

DEPTH (ft)	HOUR	DATE
	* None	

BORING OPERATION
NWT - 4.5" O.D. Casing
NW - 4.25" O.D. Wireline Rock Coring
HQ - 3.78" O.D. Wireline Rock Coring
HQ - 2.5" O.D. Wireline Rock Coring
S - 3" OD/1.38" ID. Tube Sample
B - Disturbed Bulk Sample

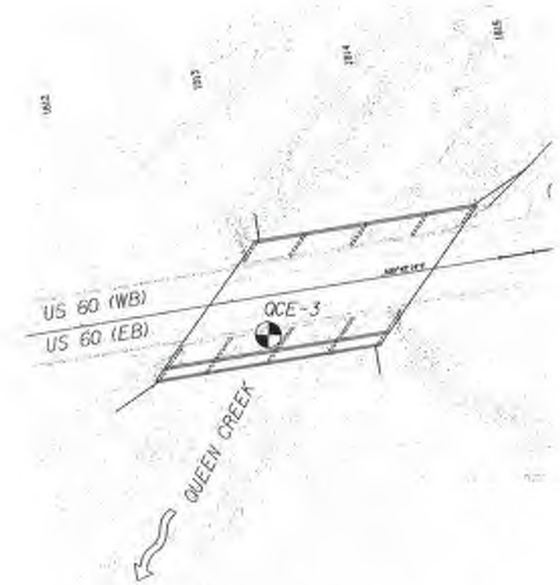

N

Legend

QCE-3 Boring Identifier & Location

	NAME	DATE
DESIGN	RB	11/14
DRAWN	CWH	11/14
CHECKED	DMF	11/14

amec
Environment & Infrastructure, Inc.
8181 East Washington Street
Suite 100
Phoenix, Arizona
(602) 723-6000

ARIZONA DEPARTMENT OF TRANSPORTATION
INTERMODAL TRANSPORTATION DIVISION
BRIDGE GROUP

STA 1812+
QUEEN CREEK WASH BRIDGE
FOUNDATION DATA SHEET 4

US 60	223.9	436
ROUTE	MILEPOST	STRUCTURE NO.

LOCATION: SILVER KING SECTION & SUPERIOR STREETS

DWG. SF-8.04

TRACS NO. H7900 01C | 060-D-(208)S

REDUCED SIZE
Do Not Scale

F.A.H.W.A. REGION	STATE	PROJECT NO.	SHEET NO.	TOTAL SHEETS	AS BUILT
9	ARIZ.	060-D-Q208IS	590	754	10/12/18
		060 PN 222			

LOG OF TEST BORING NO. QCE-4

JOB NO. 17-2012-4011 DATE 10-9-12 to 10-10-12

RIG TYPE: Bucyrus Track-mounted
METHOD: HQ-3 Wireline Coring
OPERATOR: CMJR Subsurface, Inc.
LOGGED BY: Noble Consultants
LOCATION: Queen Creek East Bridge - Pier 3
STA/OFFSET: WB Station 1813+20, 30' R
ELEVATION: 1745'
DATUM: NAVD Base Maps

Boring Diameter Size and Bit Size (inch/hole)	Depth in Feet	Sample	Sample Type	Unconfined Compressive or Point Load Strength (ksf)	% Core Recovery	% Drilling Fluid Rec.	Rock Quality Designation (RQD)	Spacing (Wide – Close)	Orientation (Horiz – Vert)	Condition	Bedding and/or Fabric	Weathering or USCS Symbol	Rock Type & Remarks
15/9 HW 1.7	0		HW		4	100	0	NO RECOVERY	NO RECOVERY	N/A	N/A	OP	Alluvium – Channel Deposit SAND, GRAVEL, COBBLES & BOULDERS, predominantly fine to medium grained sand & coarse grained gravel, uncemented, angularity, brown
													note: SPT blow counts at: 50/2" at 3.1'
15/10 NQ 1.0	5		HQ		5	0	0						
					70		N/A	N/A	N/A				note: boulders range up to 1.0' in diameter
													note: cobble-sized fragments of concrete below 6.5'
2.0	10		S										note: SPT blow counts at: 2-4-7 at 10.4'
			HQ		60	15	10			Smth Sln	Wave-ine	SW to MDW	Bulow Calcareous MUDSTONE, soft to very soft, light brown
				104									
						100							
	15		S		N/A	N/A	N/A	N/A	N/A				note: mudstone breaks down to medium to high plasticity clay
			HQ		100		0						note: discontinuous cracks stained with black manganese-oxide
													note: SPT blow counts at: 5-19-31 at 15.4'
5.4	20		S		N/A	N/A	N/A	N/A	N/A				note: SPT blow counts at: 15-29-50 at 20.4'
			HQ		90		10					SW	note: The mudstone is a massive unit with few discontinuities. In most cases the RQD values are based primarily on the presence of soft zones within the rock mass rather than the presence of discontinuities.
60/10 HQ 5.8	25		S		N/A	N/A	N/A	N/A	N/A				note: SPT blow counts at: 11-21-43 at 25.4'
			HQ		90		62						note: moderately soft to soft from 27.3' to 29.3'
													note: soft to very soft below 29.3'
4.5	30		S		N/A	N/A	N/A	N/A	N/A				note: SPT blow counts at: 10-30-37 at 30.4'
			HQ		25		0						
	35		S		N/A	N/A	N/A	N/A	N/A				note: SPT blow counts at: 15-24-50 at 35.4'
			HQ		90		45						note: discontinuous crack surfaces stained with black manganese-oxide
	40			127									
3.9			S		N/A	N/A	N/A	N/A	N/A				note: SPT blow counts at: 3-14-50 at 40.4'
			HQ	127 165	100		75						
	45												
3.3			S		N/A	N/A	N/A	N/A	N/A				note: SPT blow counts at: 14-27-50/3.5" at 45.4'
			HQ		100		65						
	50												

LOG OF TEST BORING NO. QCE-4 (CONTINUED)

JOB NO. 17-2012-4011 DATE 10-9-12 to 10-10-12

RIG TYPE: Bucyrus Track-mounted
METHOD: HQ-3 Wireline Coring
OPERATOR: CMJR Subsurface, Inc.
LOGGED BY: Noble Consultants
LOCATION: Queen Creek East Bridge - Pier 3
STA/OFFSET: WB Station 1813+20, 30' R
ELEVATION: 1745'
DATUM: NAVD Base Maps

Boring Diameter Size and Bit Size (inch/hole)	Depth in Feet	Sample	Sample Type	Unconfined Compressive or Point Load Strength (ksf)	% Core Recovery	% Drilling Fluid Rec.	Rock Quality Designation (RQD)	Spacing (Wide – Close)	Orientation (Horiz – Vert)	Condition	Bedding and/or Fabric	Weathering or USCS Symbol	Rock Type & Remarks
15/10 HQ 3.2	50					100							Calcareous MUDSTONE, continued
			S		N/A	N/A	N/A	N/A	N/A	Smth Sln	Wave-ine	SW	note: soft to very soft & light brown
			HQ		100		78						note: SPT blow counts at: 8-27-50 at 50.4'
	55		S		N/A	N/A	N/A	N/A	N/A				note: SPT blow counts at: 14-24-50/3" at 55.4'
	60												Stopped HQ Coring at 55.4' Sampler refused at 58.8' Backfilled borehole with bentonite chips * Because water was injected into the boring while drilling, it is not known if groundwater was encountered.
	65												
	70												
	75												

DISCONTINUITIES

DEPTH (ft)	HOLE	DATE
	* NONE	

BORING DESIGNATION
WWT – 4.25" O.D. Casing
WW – 4.25" O.D. Wireline Rock Coring
HQ – 3.25" O.D. Wireline Rock Coring
NQ – 2.6" O.D. Wireline Rock Coring
S – 2" O.D./1.50" I.D. Tube Sample
D – Disturbed Bulk Sample

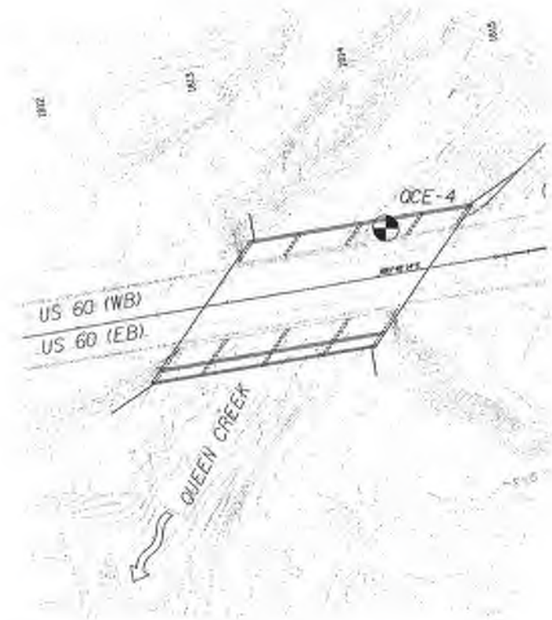

N

Legend

QCE-4 Boring Identifier & Location

	NAME	DATE
DESIGN	RB	11/14
DRAWN	GNH	11/14
CHECKED	DAF	11/14

amec Environment & Infrastructure, Inc. 4000 East Washington Street Suite 500 Phoenix, Arizona (602) 133-6000

ARIZONA DEPARTMENT OF TRANSPORTATION
INTERMODAL TRANSPORTATION DIVISION
BRIDGE GROUP

STA 1812+
QUEEN CREEK WASH BRIDGE
FOUNDATION DATA SHEET 5

ROUTE	MILEPOST	STRUCTURE NO.	LOCATION
US 60	223.9	436	SILVER KING SECTION & SUPERIOR STREETS

TRACS NO. H7900 01C | 060-D-(208)S

37284 DANIEL M. FINCHETTE 4-2-2014 ARIZONA, U.S.A.

DWG. SF-8.05

688 OF 872

REDUCED SIZE
Do Not Scale

REDUCED SIZE
Do Not Scale

F.H.W.A. REGION	STATE	PROJECT NO.	SHEET NO.	TOTAL SHEETS	AS BUILT
9	ARIZ.	060-D-(208)S	591	754	10/12/18
		060 PN 222			

LOG OF TEST BORING NO. QCE-5

JOB NO. 17-2012-4011 DATE 9-23-12

RIG TYPE: Bucyrus Truck-mounted
METHOD: HQ-3 Wireline Coring
OPERATOR: CRUX Subsurface, Inc.
LOGGED BY: Wade Cannaris
LOCATION: Queen Creek Wash Bridge - Westbound 2
STA/OFFSET: WB Station 1811+90, 35' R
ELEVATION: 2710'
DATUM: ADOT Base Mean

Boring Diameter Size in Inches (mm/feet)	Depth in Feet	Sample	Sample Type	Uncorrected Penetration Resistance (Blows/Foot)	% Core Recovery	% Drilling Fluid Ret.	Rock Quality Designation (RQD)	Discontinuities: Spacing (Wide - Close)	Discontinuities: Orientation (Horiz - Vert)	Discontinuities: Condition	Bedding and/or Foliation	Weathering or USCS Soils	Rock Type & Remarks
8/123 HW 4.0	0		HW		N/A	100	N/A	NO RECORD	NO RECORD	N/A	N/A	CP	Man-made FILL SAND, GRAVEL & COBBLES, uncemented, nonplastic, brown note: SPT blow counts at: 50/2" at 1.0' note: lost circulation at 5.0'
4.5			S										
	5			0								SM	SILTY SAND WITH GRAVEL, some predominantly fine grained, subangular gravel, predominantly fine to medium grained, subangular to subrounded sand, uncemented, nonplastic, brown note: SPT blow counts at: 13-15-13 at 6.5'
2.5			S										
	10			50								TC to SM	CLAYEY TO SILTY SAND WITH GRAVEL, some to considerable predominantly coarse grained, subangular to angular gravel, predominantly fine to medium grained, subangular to subrounded sand, uncemented with occasional calcareous white nodules, low plasticity, brown
2.1			S									GM	
													note: SPT blow counts at: 15-30-18 at 11.5' note: boulders below 13.0'
	15												Water SILTY GRAVEL WITH SAND, considerable fine to medium grained, subangular to subrounded sand, predominantly coarse grained, subangular to subrounded gravel, uncemented, nonplastic, brown note: boulders from 16.5' to 19.5' note: SPT blow counts at: 50/1" at 14.0' note: SPT blow counts at: 28-37-24 at 21.5'
6.5			S										
	20			100									
4.4			S										
										Smooth Slin	Dip within 1	SM-MRM	Calcareous MUDSTONE, very soft, brown
6/123 HW	25				N/A	N/A				Smooth Slin some curved		SM	note: the mudstone is a massive unit with few discontinuities. In most cases the RQD values are based primarily on the presence of soft zones within the rock mass rather than the presence of discontinuities
HQ 7.4			0		N/A	N/A	N/A	N/A					
			HQ			30	0						note: soft to very soft, brown below 27.0'
N/A			S		N/A	N/A	N/A	N/A					
2.7	30		HQ			100	10						note: considerable black manganese-oxide staining on desiccation crack surfaces note: ring blow counts at: 85 at 28.5'
													note: SPT blow counts at: 12-22-43 at 28.4'
N/A			S		N/A	N/A	N/A	N/A					note: breaks down to medium plasticity clay note: SPT blow counts at: 11-22-36 at 33.4'
2.5	35		HQ			100	0						
N/A			S		N/A	N/A	N/A	N/A					note: SPT blow counts at: 11-24-48 at 38.4'
3.3	40		HQ			100	0						
N/A			S		N/A	N/A	N/A	N/A					note: SPT blow counts at: 10-21-44 at 43.4'
3.8	45		HQ			100	0						note: poor to zero RQD values due to very soft to soft rockmass
N/A			S		N/A	N/A	N/A	N/A					note: SPT blow counts at: 8-22-41 at 48.4'
	50												

LOG OF TEST BORING NO. QCE-5 (CONTINUED)

JOB NO. 17-2012-4011 DATE 9-23-12

RIG TYPE: Bucyrus Truck-mounted
METHOD: HQ-3 Wireline Coring
OPERATOR: CRUX Subsurface, Inc.
LOGGED BY: Wade Cannaris
LOCATION: Queen Creek Wash Bridge - Westbound 2
STA/OFFSET: WB Station 1811+90, 35' R
ELEVATION: 2710'
DATUM: ADOT Base Mean

Boring Diameter Size in Inches (mm/feet)	Depth in Feet	Sample	Sample Type	Uncorrected Penetration Resistance (Blows/Foot)	% Core Recovery	% Drilling Fluid Ret.	Rock Quality Designation (RQD)	Discontinuities: Spacing (Wide - Close)	Discontinuities: Orientation (Horiz - Vert)	Discontinuities: Condition	Bedding and/or Foliation	Weathering or USCS Soils	Rock Type & Remarks
6/123 HQ 4.0	50		HQ		100	100	0			Smooth Slin	Dip within 1	SM	Calcareous MUDSTONE, continued note: very soft, light brown note: black manganese-oxide staining on desiccation crack surfaces
4.5			S		N/A	N/A	N/A	N/A	N/A		Bedding		note: SPT blow counts at: 10-16-50/5" at 51.4'
	55		HQ			100	0						
3.3			S		N/A	N/A	N/A	N/A	N/A				note: SPT blow counts at: 23-46-50/6" at 58.4'
	60		HQ			100	0						
—			S		N/A	N/A	N/A	N/A	N/A				note: SPT blow counts at: 15-25-50/5 1/2" at 63.4'
	65												Stopped HQ Coring at 65.4' Sampler refused at 64.9' Backfilled borehole with bentonite chips * Bentonite water was injected into the boring while drilling. It is not known if groundwater was encountered.
	70												
	75												

GROUNDWATER

	DATE	HOUR	CASING
W		* None	
W			
W			
W			

BORING OPERATION
HWT - 4.0" O.D. Casing
HW - 4.25" O.D. Wireline Rock Coring
HQ - 3.28" O.D. Wireline Rock Coring
NQ - 2.8" O.D. Wireline Rock Coring
S - 3" O.D./1.26" I.D. Tube Sample
B - Disturbed Bulk Sample

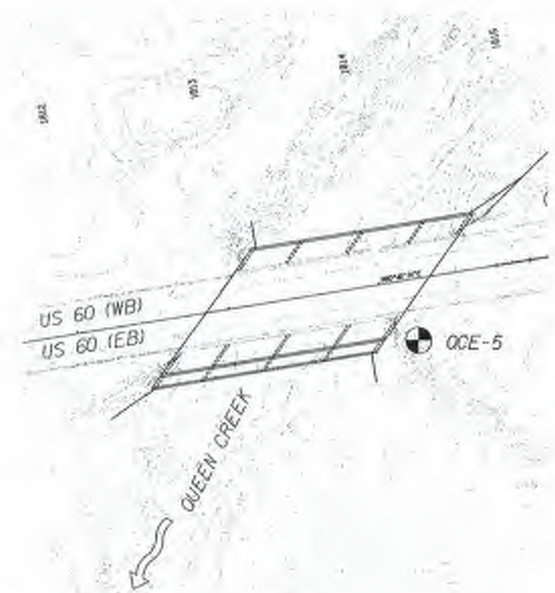

N

Legend

QCE-5 Boring Identifier & Location

	NAME	DATE
DESIGN	RBI	11/14
DRAWN	GRDH	11/14
CHECKED	DNF	11/14

amec Environment & Infrastructure, Inc. 4600 East Washington Street Suite 300 Phoenix, Arizona (602) 733-6000

ARIZONA DEPARTMENT OF TRANSPORTATION
INTERMODAL TRANSPORTATION DIVISION
BRIDGE GROUP

STA 1812+
QUEEN CREEK WASH BRIDGE
FOUNDATION DATA SHEET 6

LOCATION: SILVER KING SECTION & SUPERIOR STREETS

ROUTE	MILEPOST	STRUCTURE NO.
US 60	223.9	436

TRACS NO. H7900 01C

060-D-(208)S

DWG. SF-8.06

Queen Creek @ Magma Ave Bridge Plans

PER. REF. DIV. NO.	STATE	PROJECT NO	SHEET NO.	TOTAL SHEETS	AS BUILT
7	ARIZONA	Non FA 16(3)	10		12-8-49 RWG

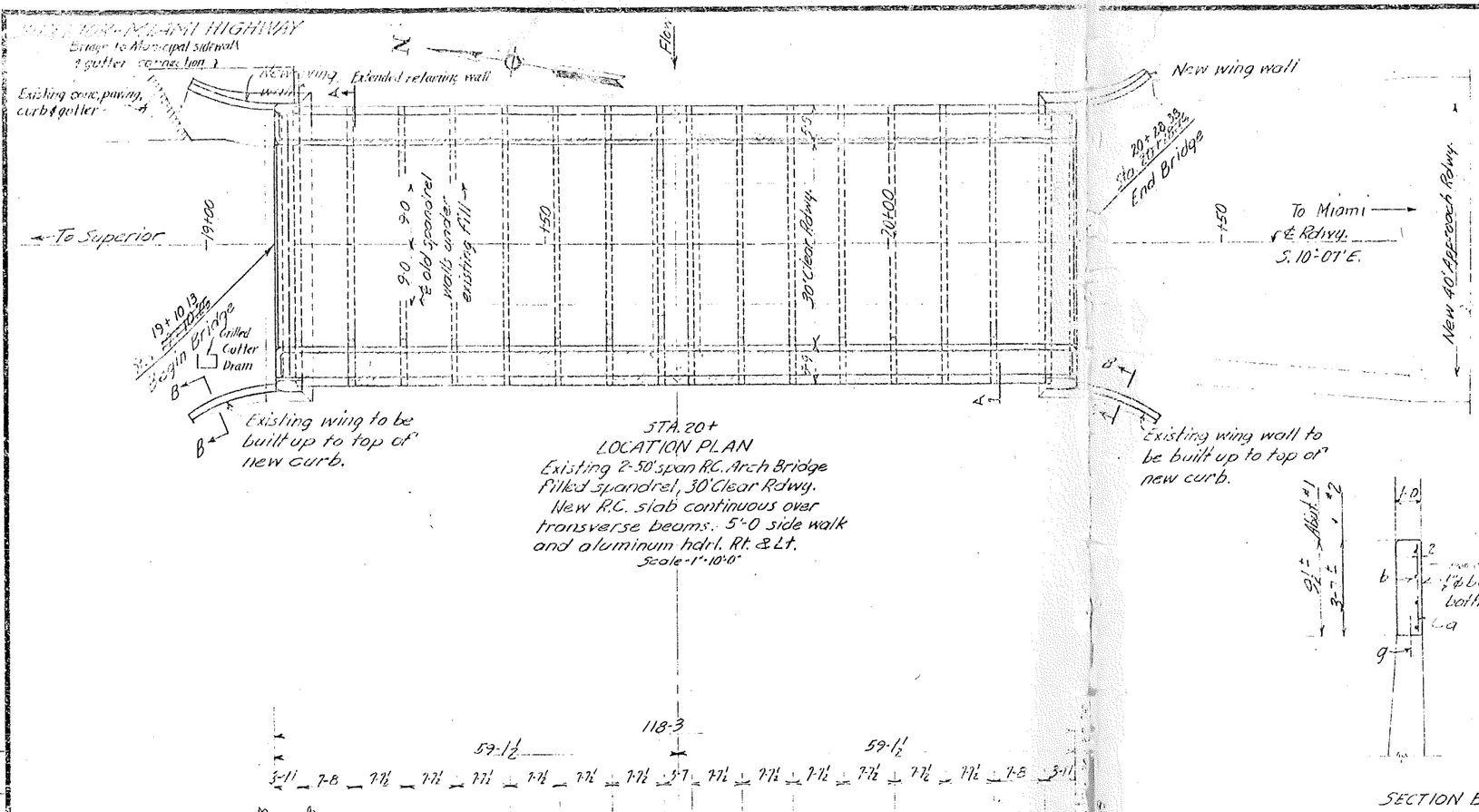

STA. 20+
LOCATION PLAN
Existing 2-50' span R.C. Arch Bridge
Filled spandrel, 30' Clear Rdwy.
New R.C. slab continuous over transverse beams. 5'-0 side walk and aluminum hdrl. Rt. & Lt.
Scale-1"=10'-0"

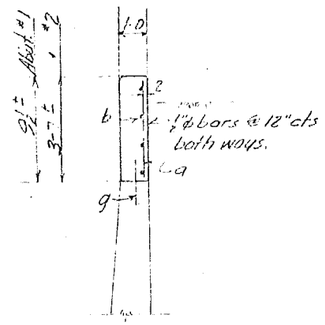

SECTION B-B
Scale-3/8"=1'-0"

STEEL LIST
To raise downst'm wing walls

Mark	Size	Grade	No.	Lgth.	No.	Lgth.
			Abut #1		Abut #2	
a	½"ϕ	St.	—	—	15	3.0
b	✓	✓	1	14.6	4	14.6
g	¾"ϕ	✓	8	2.0	8	2.0

Chamfer all exposed corners thus, unless otherwise noted.

APPROXIMATE QUANTITIES

Item	Sheet No.	Str. Excav. C.Y.	Class A Conc. C.Y.	Reinf. Steel Lbs.	Alum. Hdrl. Lin. Ft.	Remove old Conc. C.Y.	Placing Dowels Ea.
Abutment #1	11	30	25.76	1320		4	41
" #2	12	30	26.63	1540		3	35
Pier	—	—	—	—	—	—	—
Deck	13-14	110	233.27	35210	216.0 ~~215.7~~	40	52
Gutter & sidewalk conc.							
Retaining wall & gutter drain			6.38				
TOTALS		170	~~285.66~~ 286.70		~~216.0~~ 216.0	47	128

Sheet #5 of 5 Std. handrail HA-1

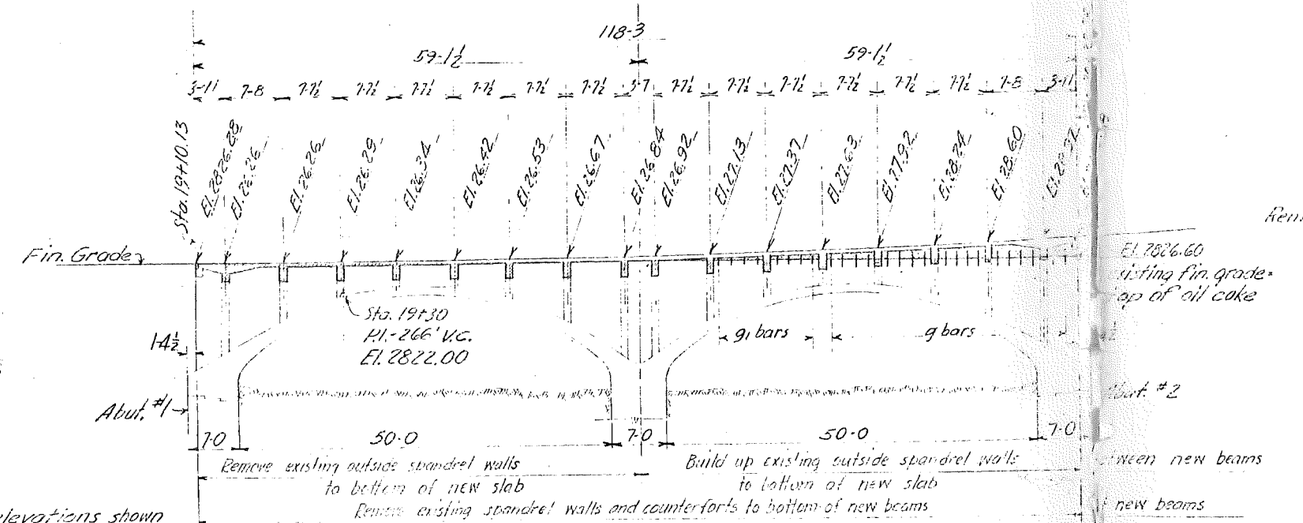

NOTE-
All elevations shown are fin. grade @ ℄ roadway.
Bars marked g are ¾"ϕ x 2.0 dowels @ 18" cts. drill and set in grout 1.0 in exist. conc.
Bars marked g1 are ¾"ϕ x 1.0 dowels @ 18" cts. drill and set in grout 6" in exist. conc.
= Concrete to be removed.
= Spandrel wall build-up.

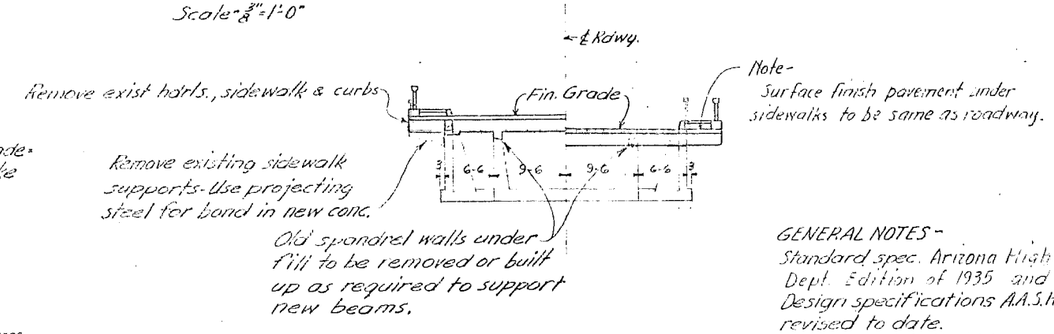

SECTION A-A

Property of Bridge Management
Structure No.: 8479
Str. Name: Queen Creek Arch Br
Road Name: Magma Ave
Agency: Superior

GENERAL NOTES-
Standard spec. Arizona Highway Dept. Edition of 1935 and supplements.
Design specifications A.A.S.H.O. 1944 revised to date.
Loading-H20-S16 '44
Stresses-f_c=18000, f_s=800, n=12
Use intermediate grade reinf. steel

Structure # 8479
Town of Superior
ALL CONCRETE CLASS A

		DATE
LAYOUT		
DESIGN		
ARCHITECTURE		
DRAWN	DA	9/10/47
TRACED		
CHECKED	G.C.	11/25/47
SHEET NO. 1 OF 5		

ARIZONA HIGHWAY DEPARTMENT
BRIDGE DIVISION

STA. 20+
SUPERIOR BRIDGE
LOCATION DETAILS

BRIDGE NUMBER | DRAWING NUMBER | BRIDGE ENGINEER

Non FA 16(8)

SUPERIOR-MIAMI HIGHWAY

FED. ROAD DIV. NO.	STATE	PROJECT NO.	SHEET NO.	TOTAL SHEETS	AS BUILT
7	ARIZONA	Non-FA 168(8)	11		12-8-49 RNG

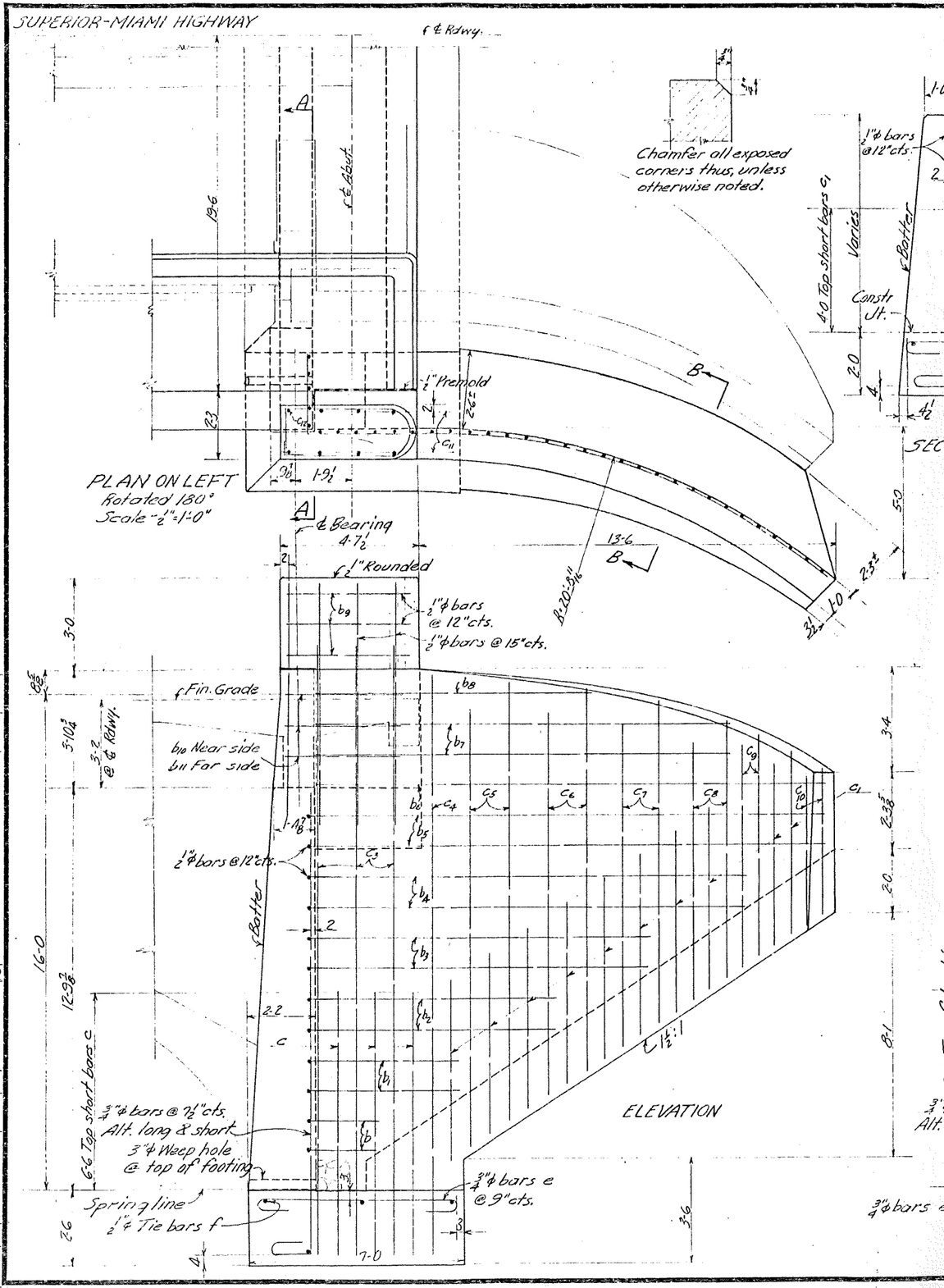

STEEL LIST

Mark	No.	Size	Length	Form
b	2	1/2"φ	4'-6	b
b_1	2	"	7'-3	"
b_2	2	"	10'-3	"
b_3	2	"	13'-3	"
b_4	2	"	17'-0	"
b_5	2	"	20'-3	"
b_6	1	"	18'-0	Str.
b_7	2	"	14'-3	"
b_8	1	"	9'-0	"
b_9	6	"	12'-0	B_1
b_{10}	3	"	4'-0	Str.
b_{11}	3	"	2'-6	"
c	5	3/4"φ	10'-9	C
c_1	10	"	7'-9	"
c_2	3	"	17'-0	"
c_3	3	"	22'-0	"
c_4	1	"	20'-9	"
c_5	2	"	16'-3	"
c_6	2	"	14'-6	"
c_7	2	"	12'-3	"
c_8	2	"	10'-3	"
c_9	2	"	9'-3	"
c_{10}	2	"	6'-9	"
c_{11}	7	1/2"φ	8'-0	Str.
c_{12}	2	"	2'-6	"
c_{13}	7	"	3'-6	"
e	6	"	8'-3	E
e_1	25	"	4'-9	"
f	4	"	4'-0	Str.
f_1	4	"	18'-0	"
g	33	3/4"φ	2'-0	"

		DATE
LAYOUT		
DESIGN	DA	9/23/47
ARCHITECTURE		
DRAWN	DA	11/22/47
TRACED		
CHECKED	W.T.	8/10/48
[illegible]		

SHEET NO. 2 OF 5

ARIZONA HIGHWAY DEPARTMENT
BRIDGE DIVISION

20+
SUPERIOR BRIDGE
ABUTMENT No. 1

BRIDGE NUMBER | DRAWING NUMBER | BRIDGE ENGINEER

REGISTERED CIVIL ENGINEER ARIZONA, U.S.A.

Non FA 168(8)

SUPERIOR-MIAMI HIGHWAY

FED. ROAD DIV. NO.	STATE	PROJECT NO	SHEET NO	TOTAL SHEETS	AS BUILT
7	ARIZONA	1(7) Nor FA. 16.(9)	12	-	12-8-19 & 1-16

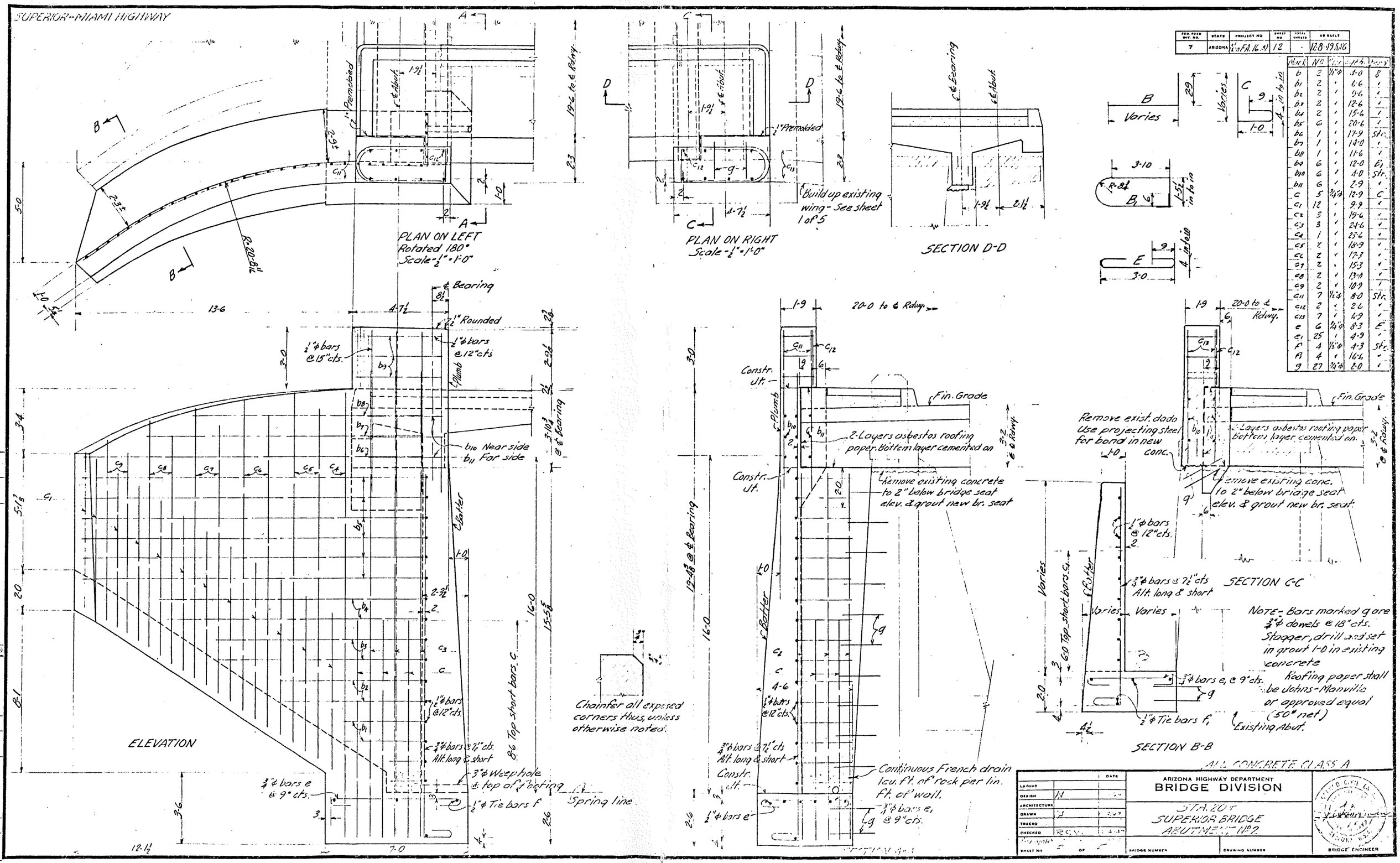

Mark	No.	Size	Length	Remarks
b	2	½"φ	4'-0	B
b1	2	"	6'-6	"
b2	2	"	9'-6	"
b3	2	"	12'-6	"
b4	2	"	15'-6	"
b5	6	"	20'-6	"
b6	1	"	17'-9	Str.
b7	1	"	14'-0	"
b8	1	"	11'-6	"
b9	6	"	12'-0	B1
b10	6	"	4'-0	Str.
b11	6	"	2'-9	"
c	5	¾"φ	12'-9	C
c1	12	"	9'-9	"
c2	3	"	19'-6	"
c3	3	"	24'-6	"
c4	1	"	23'-6	"
c5	2	"	18'-9	"
c6	2	"	17'-3	"
c7	2	"	15'-3	"
c8	2	"	13'-1	"
c9	2	"	10'-9	"
c11	7	½"φ	8'-0	Str.
c12	2	"	2'-6	"
c13	7	"	6'-9	"
e	6	¾"φ	8'-3	E
e1	25	"	4'-9	"
f	4	½"φ	4'-3	Str.
f1	4	"	16'-6	"
g	27	¾"φ	2'-0	"

		DATE
LAYOUT		
DESIGN		
ARCHITECTURE		
DRAWN		
TRACED		
CHECKED		

ARIZONA HIGHWAY DEPARTMENT
BRIDGE DIVISION

STA. 20+
SUPERIOR BRIDGE
ABUTMENT No. 2

SHEET NO. 5 OF 5 | BRIDGE NUMBER | DRAWING NUMBER | BRIDGE ENGINEER

Nor FA 16(9)

SUPERIOR-MIAMI HIGHWAY
PINAL COUNTY

FED. ROAD DIV. NO.	STATE	PROJECT NO.	SHEET NO.	TOTAL SHEETS	AS BUILT
7	ARIZONA	Hon FA 16(8)	13		12-8-49 A16

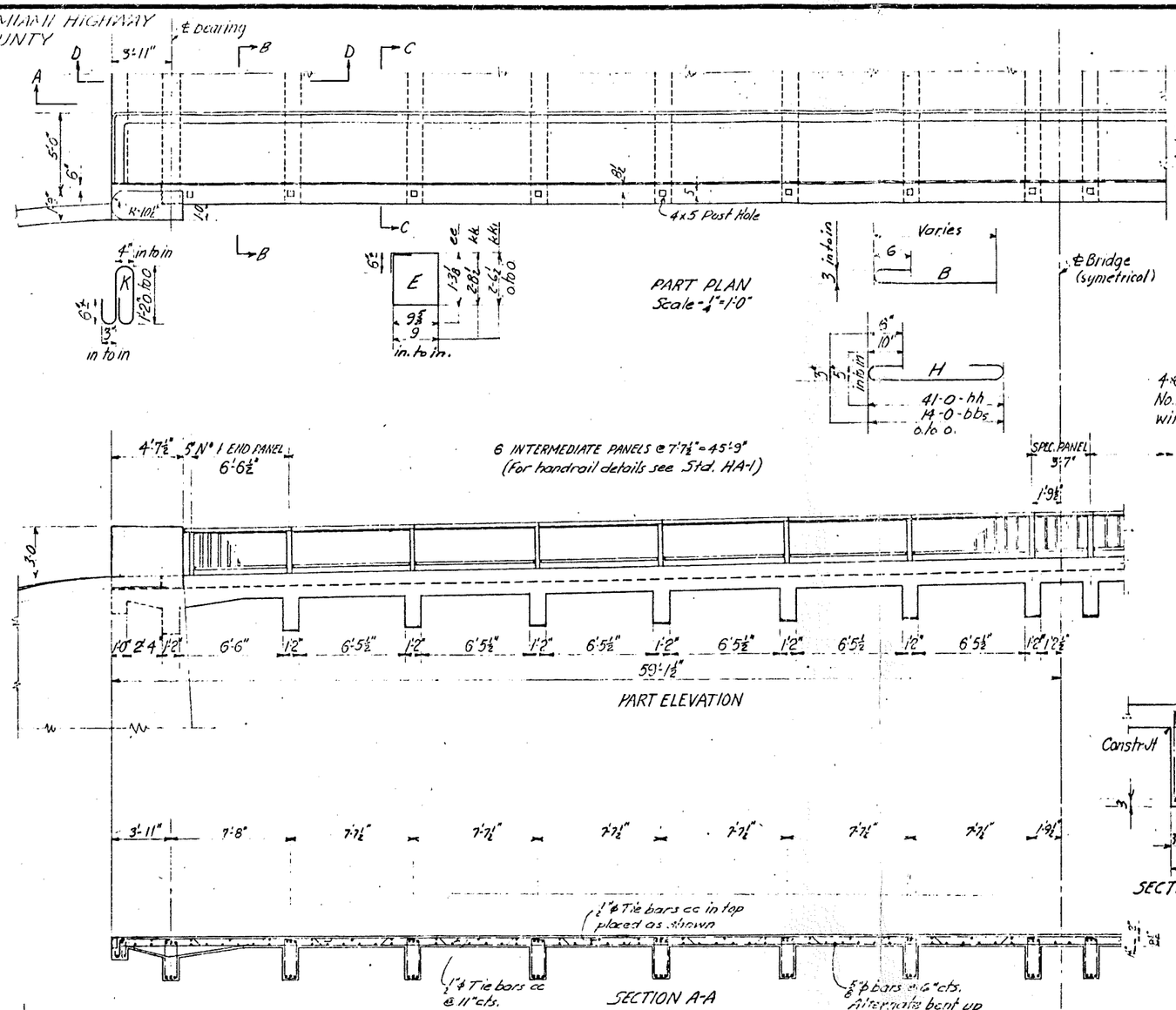

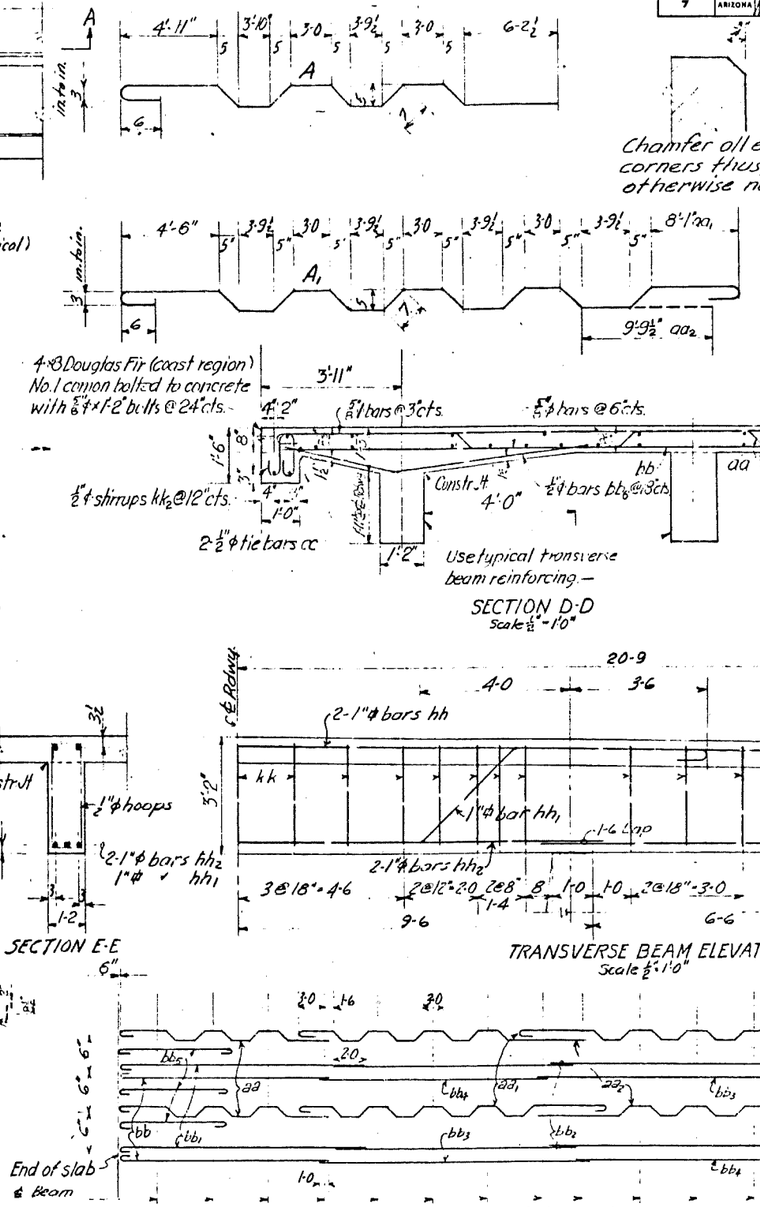

STEEL LIST

Mark	No	Size	Length	Reel
aa	20	⅝ϕ	28-6	A
aa1	10	"	42-9	A1
aa2	10	"	39-6	"
bb	80	"	27-6	B
bb1	39	"	32-0	"
bb2	88	"	30-6	Str
bb3	43	"	35-0	"
bb4	43	"	31-6	"
bb5	120	"	15-3	H
bb6	56	½ϕ	8-0	Str
cc	140	"	20-3	"
cc1	140	"	22-3	"
ee	224	"	5-0	E
ff	118	¾ϕ	1-0	Str
gg	6	½ϕ	40-6	"
hh	32	1"ϕ	43-0	H
hh1	16	"	19-3	H1
hh2	32	1"ϕ	19-6	Str
hh3	32	¾"ϕ	11-8	"
kk	336	½ϕ	3-0	E
kk1	64	"	7-9	"
kk2	78	"	4-0	K
* g	36	¾"ϕ	2-0	Str
* g1	16		1-0	"

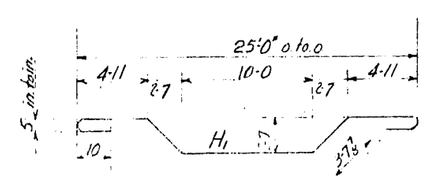

		DATE
LAYOUT		
DESIGN		
ARCHITECTURE		
DRAWN		
TRACED		
CHECKED		

ARIZONA HIGHWAY DEPARTMENT
BRIDGE DIVISION

STA. 201
SUPERIOR BRIDGE
FLOOR DETAILS

SHEET NO. OF | BRIDGE NUMBER | DRAWING NUMBER | BRIDGE ENGINEER

Hon. FA 16(8)

FEDERAL AID NO.	STATE	PROJECT NO.	SHEET NO.	TOTAL SHEETS	NO. BUILT
7	ARIZONA	IM-FA-16(10)	14		12-8-49 R.M.

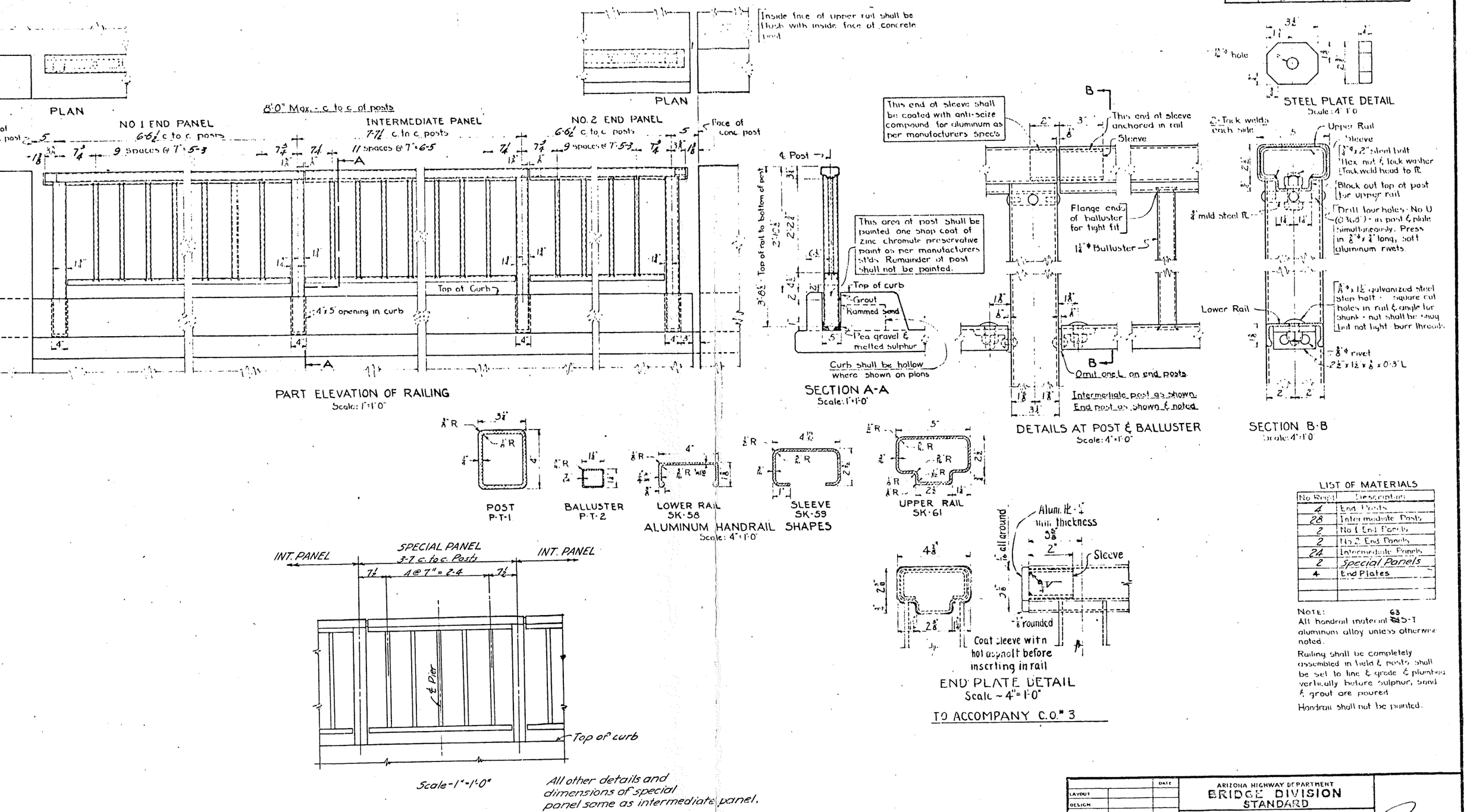

TO ACCOMPANY C.O.# 3

LIST OF MATERIALS

No. Req'd	Description
4	End Posts
28	Intermediate Posts
2	No 1 End Panels
2	No 2 End Panels
24	Intermediate Panels
2	Special Panels
4	End Plates

NOTE:
All handrail material ~~#~~ 63 S-T aluminum alloy unless otherwise noted.

Railing shall be completely assembled in field & posts shall be set to line & grade & plumbed vertically before sulphur, sand & grout are poured

Handrail shall not be painted.

		DATE
LAYOUT		
DESIGN		
ARCHITECTURE		
DRAWN	A.K.M.	3-8-47
TRACED		
CHECKED	R.C.W.&B.	12-8-47
SHEET NO. 5 OF 5		

ARIZONA HIGHWAY DEPARTMENT
BRIDGE DIVISION
STANDARD

STA. 20+
SUPERIOR BRIDGE
ALUMINUM HANDRAIL DETAILS

DRAWING NUMBER HA-1

BRIDGE ENGINEER

Appendix D

Supporting Documentation for Hydrology

Mine Wash

DATE:	*May 2, 2020*
TO:	Mr. Greg Ghidotti Resolution Copper Mining 102 Magma Heights Superior, AZ 85713
FROM:	Christopher Rod, P.E. JE Fuller Hydrology and Geomorphology Phone: (520) 623-3112 E-mail: Chris@jefuller.com
RE:	**Mine Wash Hydrologic Routing Analysis** **(Resolution Copper Mine – Superior Arizona)**

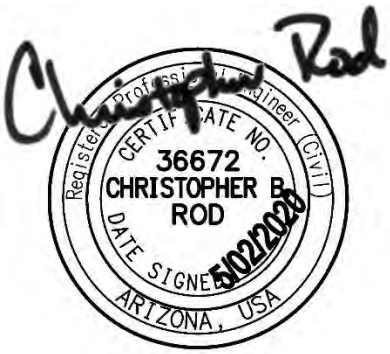

The purpose of this correspondence is to communicate the methodologies and results of the hydrologic analysis utilized in the evaluation of Mine Wash (a tributary of Queen Creek), completed for Resolution Copper Mining. As shown on FIRM Panel 0421C0286E, Mine Wash is designated as an Unnumbered A Special Flood Hazard Zone. This analysis will be used as part of a LOMR effort for Mine Wash and Queen Creek. The LOMR will be provided under separate cover.

HYDROLOGIC ANALYSIS

INTRODUCTION

The hydrologic analysis employed the United States Army Corps of Engineers HEC-HMS (v 4.2.1) modeling software and the methodologies outlined in the Arizona Department of Transportation's Hydrology Manual (2013). The model was developed to evaluate the 100-year peak discharges for the individual watersheds contributing flow to Mine Wash and the combined discharge at the confluence of Mine Wash and Queen Creek just downstream of US 60. Model parameterization was accomplished using the Arizona Department of Transportation Highway Drainage Design Manual, Volume 2, Hydrology, which has been adopted by Pinal County as an acceptable means to quantify runoff.

SUB-BASINS

Site topography coupled with existing drainage area delineations from previous studies and USGS topographic maps were used to delineate the contributing watershed and sub basins within the study area. This data was supplemented by aerial photography, particularly within the vicinity of the mining operation. Sub basin were selected to reflect changes in land use (predominantly natural vs. mining operation), slope, and to catch significant hydrologic features such as ponds, stream junctions, culverts, etc. The delineated sub basins and HEC-HMS Schematic is provided Figure 1.

As illustrated within Figure 3 (Watershed Map), the sub-basins within this analysis were divided into 2 categories, based upon the historical watershed of Mine Wash. These categories were contributing and noncontributing. Within the noncontributing basins, Basins RC12a through RC17 were evaluated within the model to verify that the upper pond within the mining operation has disconnected the flow from the historical flowpath. The remaining noncontributing area was not evaluated, as it was evident from site topography that it has been cut off from the historical flowpath. Figure 5 at the end of this document provides additional topographic detail in the vicinity of the division between the contributing and

noncontributing to illustrate this determination. Special consideration was given to the upper pond because the configuration of the outlet works created a potential for a portion of the discharge from the pond in proximity to the historical flowpath of Mine Wash. That is to say that the primary outlet culverts from the structure outlet into a channel that runs along the historical alignment over a portion of its length before cutting back west into the mine, while the emergency spillway discharges further west into the mining property and does not have the potential to outlet into the historical flowpath. A discussion of the culvert outflow from the upper pond within the mining facility and its downstream routing is provided later within this document, in the Results Section.

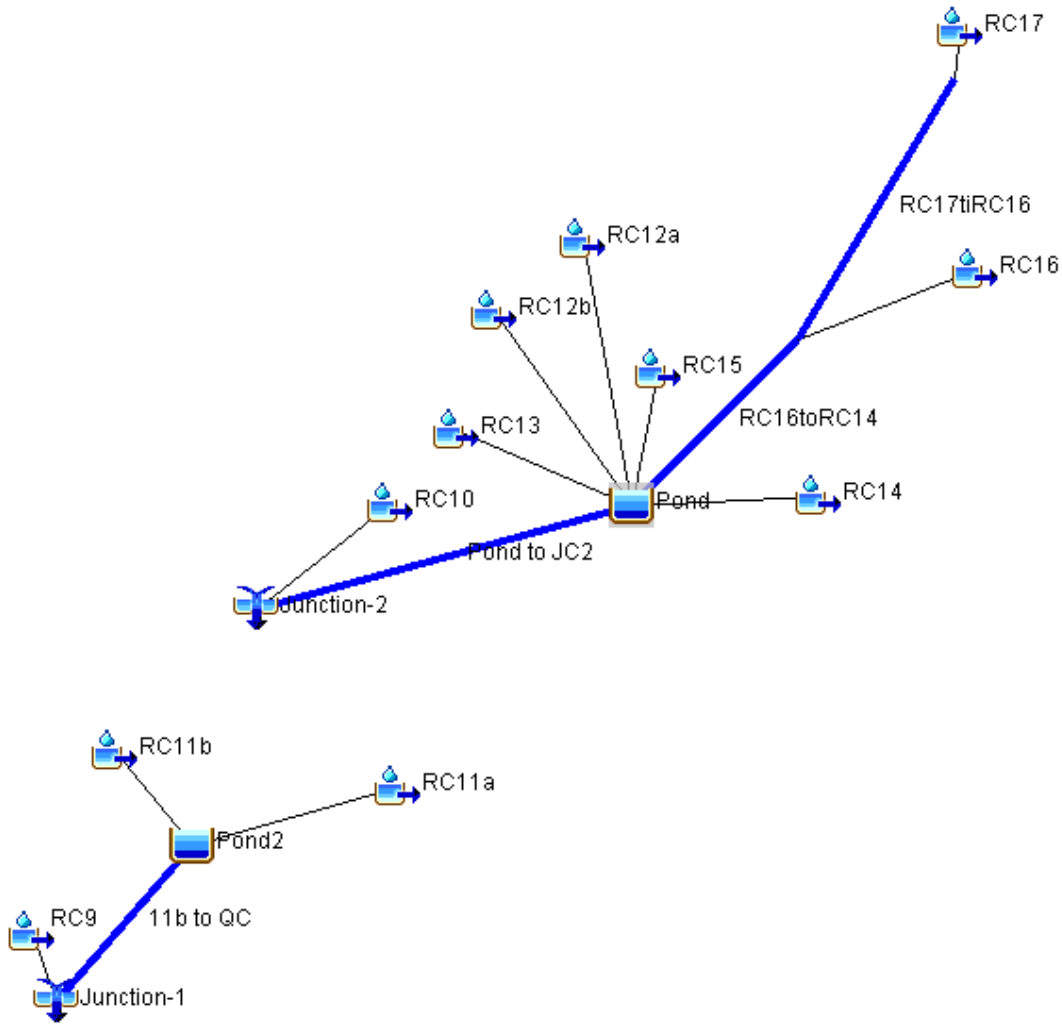

Figure 1. HMS Schematic

➢ LOSS METHOD

In order to evaluate the expected rainfall losses within the watershed, the Green & Ampt Loss Rate Method was selected because it is the primary methodology recommended within the ADOT Hydrology Manual. Application of the Green and Ampt infiltration equation requires estimation of the hydraulic conductivity, soil suction, initial moisture content, and saturated moisture content of the soil. In order to estimate these parameters for each sub basin, the GIS soil datasets prepared for use with the ADOT manual were employed. Where a sub-basin was homogenous in soil classification, the values were taken directly from the database. Sub-basins made up of two or more soil types required further calculation to determine the average values. For the conductivity and soil suction parameters, the composite value is determined using the average of the area-weighted logarithms of the individual subarea values. Composite values of soil moisture content, surface retention loss, and effective impervious area values were computed by a simple arithmetic area-weighting procedure. Losses due to surface storage were assigned based upon the values reported within Table 3-1 of the Hydrology Manual. Values of 0.1 and 0.15 were selected based upon the predominant land use/cover of the sub-basin. The effective impervious area for the sub-basins was calculated based upon the percentages of rocky outcrop reported for each soil within the ADOT soils database. For basins that included residential development, the impervious area associated with the development was determined using Table 3-2 of the Manual. Table 1 summarizes the Green & Ampt parameters determined for the analysis.

Table 1. Green & Ampt Parameters

Basin	Initial Content	Saturated Content	Suction (in)	Conductivity (in/hr)
RC9	0.11	0.41	1.31	1.29
RC10	0.11	0.41	1.31	1.29
RC11a	0.11	0.41	1.31	1.29
RC11b	0.11	0.41	1.31	1.29
RC12a	0.11	0.41	1.61	1.08
RC12b	0.11	0.41	1.44	1.19
RC13	0.11	0.41	1.31	1.29
RC14	0.14	0.41	2.74	0.68
RC15	0.11	0.41	1.43	1.19
RC16	0.16	0.41	3.82	0.51
RC17	0.16	0.41	3.82	0.51

➢ TRANSFORM METHOD

The ADOT Drainage Manual recommended synthetic unit hydrograph procedure is the Clark Unit Hydrograph Method. This method requires the estimation of two parameters - the time of concentration (Tc) and the storage coefficient (R). Based upon the characteristics of the contributing watershed, Equation 4.1 of the manual was applied to determine the time of concentration for each of the sub basins. This equation is a function of the sub-basin area, length, slope, and length along the watercourse to a point perpendicular to the watershed centroid.

Desert/mountain:

$$T_c = 2.4A^{0.1}L^{0.25}L_{ca}^{0.25}S^{-0.2} \quad 4.1$$

Agricultural:

$$T_c = 7.2A^{0.1}L^{0.25}L_{ca}^{0.25}S^{-0.2} \quad 4.2$$

Urban:

$$T_c = 3.2A^{0.1}L^{0.25}L_{ca}^{0.25}S^{-0.14}RTIMP^{-0.36} \quad 4.3$$

where:
- T_c = time of concentration, in hours,
- A = area, in square miles,
- S = watercourse slope, in ft/mile,
- L = Length of the watercourse to the hydraulically most distance point, in miles,
- L_{ca} = length measured from the concentration point along L to a point on L that is perpendicular to the watershed centroid, in miles, and
- $RTIMP$ = effective impervious area, in percent.

The storage coefficient is a Clark Unit Hydrograph parameter that relates the effects of direct runoff storage in the watershed to unit hydrograph shape and is computed using Equation 4.4 from the Manual.

$$R = 0.37T_c^{1.11}L^{0.8}A^{-0.57} \quad 4.4$$

The calculated Clark Unit Hydrograph parameters for each sub-basin are summarize in Table 2.

Table 2. Clark Unit Hydrograph Parameters

Basin	Area (sq. mi)	Area (ac)	L (mi)	Lc (mi)	High Elev. (ft)	Low Elev. (ft)	S (ft/mi)	Tc (hours)	R (hours)
RC9	0.02	14	0.60	0.18	2772	2708	106.67	0.23	0.42
RC10	0.06	38	0.76	0.36	2930	2790	184.43	0.46	0.63
RC11a	0.02	21	0.54	0.29	2868	2744	229.63	0.22	0.41
RC11b	0.03	12	0.32	0.18	2796	2740	175.00	0.30	0.27
RC12a	0.07	46	0.49	0.22	3766	3022	1518.37	0.24	0.19
RC12b	0.04	24	0.44	0.24	3622	2964	1495.45	0.23	0.24
RC13	0.0031	2	0.05	0.02	2964	2896	1413.54	0.06	0.04
RC14	0.10	62	0.63	0.4	3480	2896	923.21	0.34	0.30
RC15	0.01	7	0.21	0.08	3032	2966	317.38	0.17	0.20
RC16	0.08	51	0.48	0.22	3520	3024	1033.33	0.27	0.20
RC17	0.27	170	1.18	0.57	4760	3222	1303.39	0.45	0.37

PRECIPITATION

Precipitation depths estimates were determined for the 2-, 10- and 100-year frequency events. These values were developed from NOAA Atlas 14 Point Precipitation Frequency Estimates available through the NOAA Precipitation Frequency Data Server. Precipitation depth estimates at the centroid of each sub basin were taken for the contributing watershed to determine an average watershed wide depth for use in the model. These depths were incorporated into the model using the SCS Type 2 storm option within HEC-HMS. The depths used are shown in Table 3.

Table 3. Precipitation Depths

Duration	Average recurrence interval (years)		
	2	10	100
24-hour	2.28	3.32	4.98

ROUTING

Channel routing is used in flood hydrology models when the watershed is modeled with multiple sub-basin and runoff from the upper sub-basins must be routed through channels within downstream sub-basins to the watershed outlet. The Muskingum-Cunge routing method was used to develop the channel routing for the upper sub-basins within the current analysis. Required inputs associated with this method include the routing reach length, energy grade line slope, Manning's roughness coefficient, and cross-section geometry. These variables were determined using available topographic data and aerial imagery. Channel cross-section geometry was evaluated at several locations along the routing reaches and a representative section was determined based upon that information. Table 4 summarizes the routing information for the model.

Table 4. Routing Parameters

Reach	Length (ft)	Slope (ft/ft)	Mannings n	Bottom Width (ft)	Side Slope (xH:1V)
17-16	1963	0.10	0.035	15	3
16-14	1371	0.08	0.030	10	5
Culvert OUT	3614	0.03	0.030	15	3
11b-QC	829	0.04	0.035	24	7.5

STORAGE

In determining the peak runoff rates realized within Mine Wash, there is only on significant ponding structure that must be evaluated. In order to account for the affects of this structures, a reservoir component was included in the model. Additionally, where Mine Wash intersects US 60, a small ponding area (Pond2) is present with a culvert outlet which carries low flows west on the north side of the roadway, while higher flows would potentially flow over the roadway and on to Queen Creek. In order to evaluate the effects of this structure another reservoir was incorporated to define this feature within the model.

For both ponds within the study area, the method of outflow was set to Outflow Structures, which allows the user to define spillways and other outlets to the structures. Reservoir elements require that a method for determining storage within the reservoir as a relation to the depth be selected and the table defining that relationship be incorporated. For both of the ponds within the model, the Elevation-Area method was applied. To develop the required tables, the site topography was consulted to calculate the area of storage at each foot of depth. The initial condition for the ponding structures was set to elevation and the invert elevation of each structure was incorporated.

For the upper pond associated with sub-basin RC13-RC14, 2 outlet structures were observed. These culvert outlets were incorporated into the model with respective lengths, diameters, inlet and outlet elevations, loss coefficients, and roughness coefficients. Because the pond spillway diverted flow from the main outlet direction and away from Mine Wash, the flow direction of the spillway element was set in the Auxiliary direction. The upper pond input parameters are summarized below in Table 5.

Table 5. Upper Pond Parameters

Elevation-Area Relationship		Outlet 1		Outlet 2	
Elev. (ft)	**Area (ac)**	**Direction**	Main	**Direction**	Main
2896	0.02	**No. Barrels**	1	**No. Barrels**	1
2898	0.12	**Shape**	Circular	**Shape**	Circular
2900	0.25	**Chart/Scale**	1/1	**Chart/Scale**	1/1
2902	0.44	**Length**	174	**Length (ft)**	201
2904	0.63	**Diameter (ft)**	2	**Diameter (ft)**	2
2906	0.83	**Inlet Elev. (ft)**	2894.38	**Inlet Elev. (ft)**	2895.85
2908	1.05	**Ent. Coeff**	.6	**Ent. Coeff**	.6
2910	1.3	**Outlet Elev. (ft)**	2890.47	**Outlet Elev. (ft)**	2886.46
2912	1.54	**Exit Coeff.**	1	**Exit Coeff.**	1
2914	1.79	**Mannings n**	.024	**Mannings n**	.024
2910	1.3				
2912	1.54				
2914	1.79				
2916	2.08				
Initial Elev. (ft)	2896				

For the downstream ponding area (Pond2), the storage and initial condition was determined similarly to the upper pond. Because the culvert outlet to this area carries flow west and out of Mine Wash, the primary outlet was set to the Auxiliary direction and only the spillway (roadway) discharge was considered. To model the spillway discharge from this structure, a broad-crested spillway was selected, and the spillway elevation, length, and coefficient was specified. Tables 6 summarizes Pond2 inputs.

Table 6. Pond2 Parameters

Elevation-Area Relationship		Outlet		Spillway 1	
Elev. (ft)	**Area (ac)**	**Direction**	Auxiliary	**Method**	Broad-Crested
2738.0	0.00	**No. Barrels**	2	**Direction**	Main
2740.0	0.12	**Shape**	Circular	**Elevation (ft)**	2741
2742.0	0.36	**Chart/Scale**	2/1	**Length (ft)**	25
Initial Elev. (ft)	2742	**Length**	720	**Coefficient**	2.5
		Diameter (ft)	3		
		Inlet Elev (ft)	2740		
		Ent. Coeff	.6		
		Outlet Elev (ft)	2732		
		Exit Coeff.	1		
		Mannings n	.024		

RESULTS

The results of the HEC-HMS model for entire mine site are provided in Table 8. The flow path associated with this analysis along with the contributing watersheds is provided in Figure 3.

Table 7. HEC-HMS Discharges

HMS Node	Q_{100} (cfs)	Q_{10} (cfs)	Q2 (cfs)
Culvert Outflow	84.6	76.9	60.2
Junction 2	119.5	85.6	60.7
Pond 2	37.4	11.3	0
Junction 1 (Mine Wash/Queen Creek Confluence	61.4	23.0	5.5

As shown in Figure 2, mining activity, which was designed to divert and capture site runoff such that the facility complies with environmental regulations, has resulted in runoff no longer being conveyed within Mine Wash. To verify that the 100-year discharge for the Upper Pond is conveyed west in the mining infrastructure and not into the Mine Wash, a HEC-RAS 2-Dimensional model was developed for the defined channel downstream of the pond's culvert outlets. The 100-year outflow hydrograph was incorporated at the upper end of the modeling area. The model confirmed that the discharge will not breakout into the Mine Wash flow path but continues to the southwest. Figure 2 below illustrates the result of this analysis. The watersheds are depicted on Figure 3. In order to visually demonstrate how the discharges are routed, a separate map was created (Figure 4). This map shows both the flow entering mine wash and the existing Special Flood Hazard Zone (A) as presented on the FEMA (Panel 0421C0286).

Figure 2. Hydraulic Model Resulting Depth

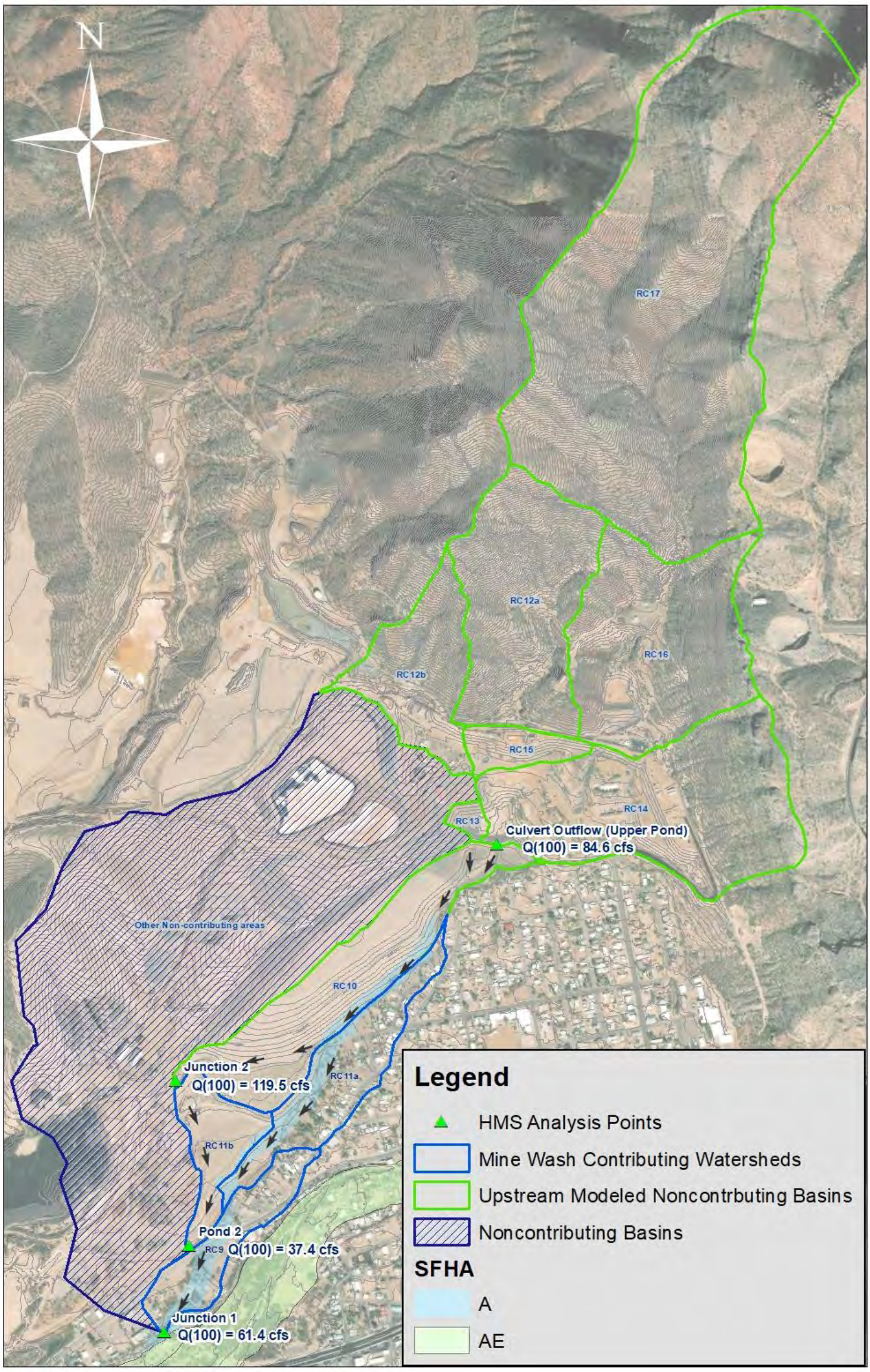

Figure 3. Watershed Map

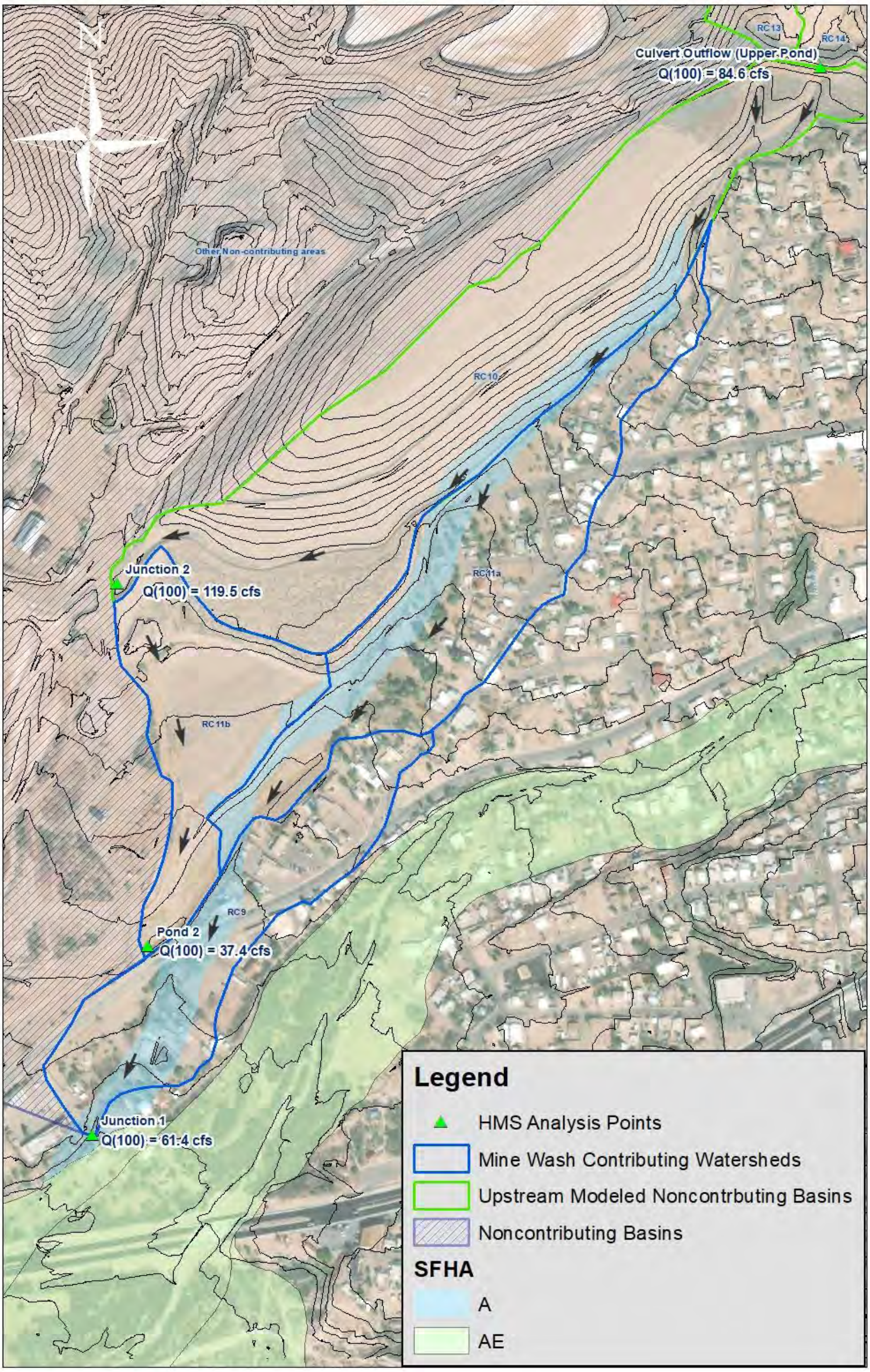

Figure 4. Discharge Routing Map

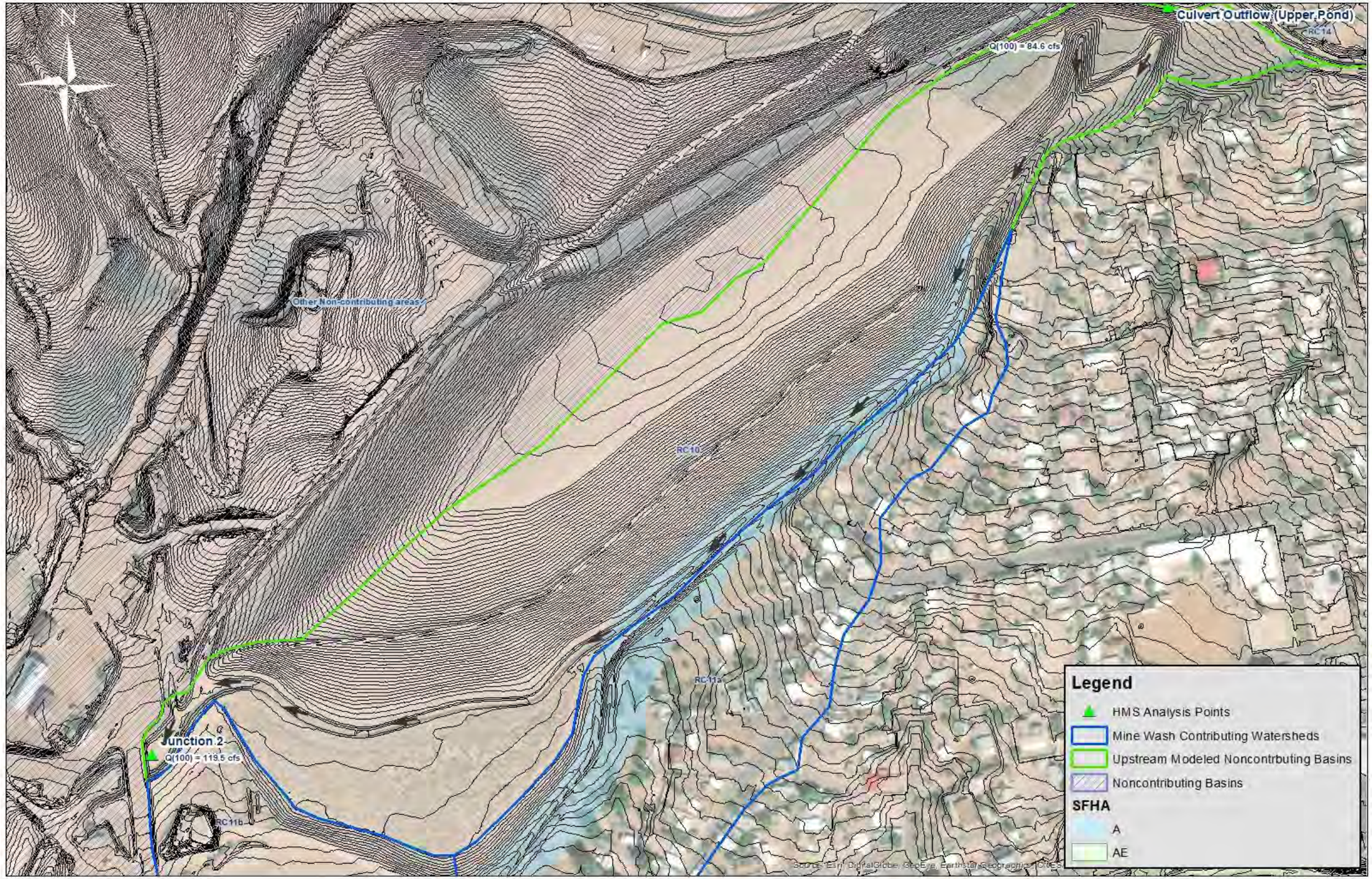

Figure 5. Culvert Outflow Channel Topography

Appendix E

Hydraulic Analysis Supporting Documentation

(digital HEC-RAS model files provided separately)

Appendix F

Workmap/Annotated FIRM

Queen Creek & Mine Wash LOMR Workmap - Superior, AZ

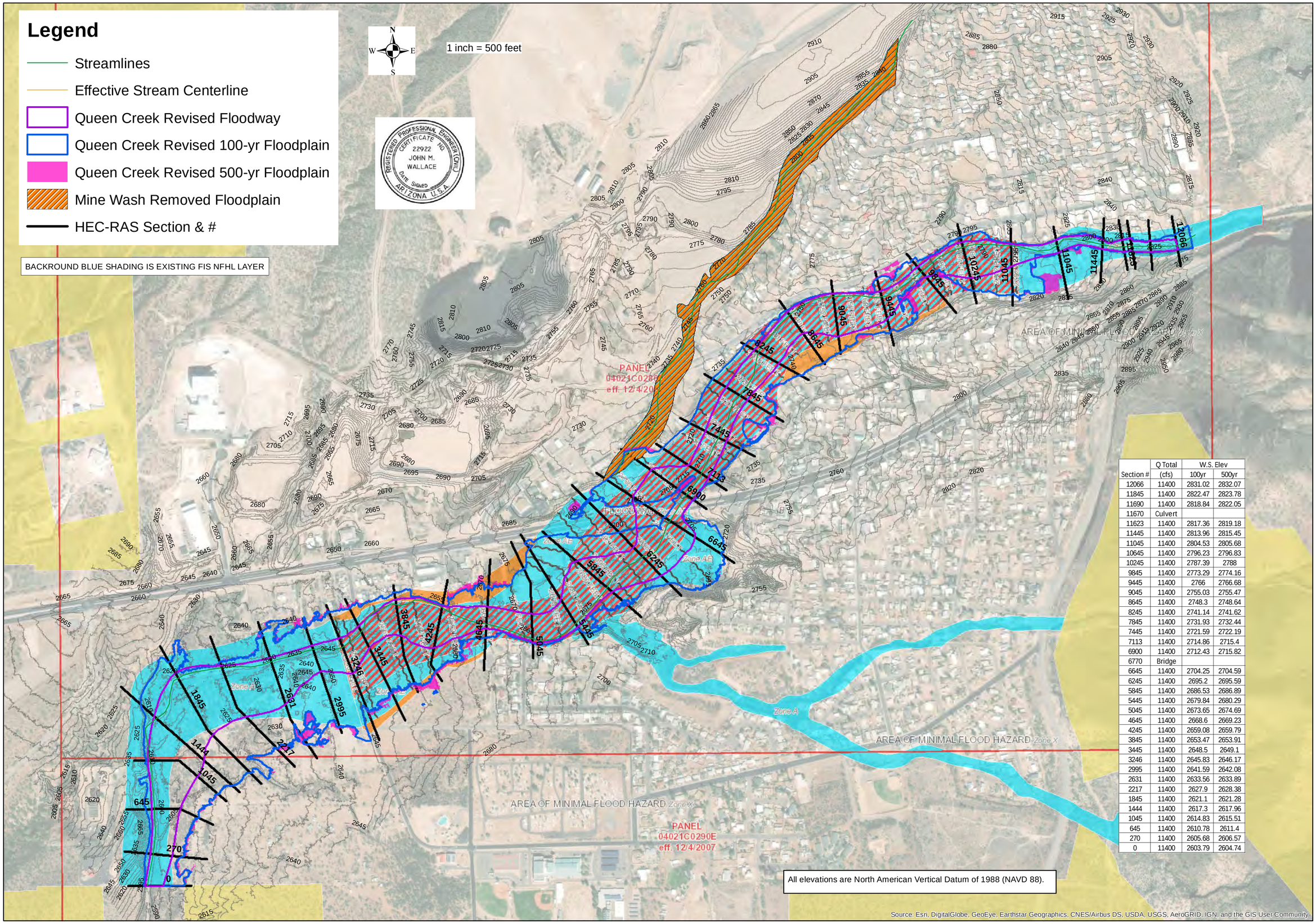

Section #	Q Total (cfs)	W.S. Elev 100yr	W.S. Elev 500yr
12066	11400	2831.02	2832.07
11845	11400	2822.47	2823.78
11690	11400	2818.84	2822.05
11670	Culvert		
11623	11400	2817.36	2819.18
11445	11400	2813.96	2815.45
11045	11400	2804.53	2805.68
10645	11400	2796.23	2796.83
10245	11400	2787.39	2788
9845	11400	2773.29	2774.16
9445	11400	2766	2766.68
9045	11400	2755.03	2755.47
8645	11400	2748.3	2748.64
8245	11400	2741.14	2741.62
7845	11400	2731.93	2732.44
7445	11400	2721.59	2722.19
7113	11400	2714.86	2715.4
6900	11400	2712.43	2715.82
6770	Bridge		
6645	11400	2704.25	2704.59
6245	11400	2695.2	2695.59
5845	11400	2686.53	2686.89
5445	11400	2679.84	2680.29
5045	11400	2673.65	2674.69
4645	11400	2668.6	2669.23
4245	11400	2659.08	2659.79
3845	11400	2653.47	2653.91
3445	11400	2648.5	2649.1
3246	11400	2645.83	2646.17
2995	11400	2641.59	2642.08
2631	11400	2633.56	2633.89
2217	11400	2627.9	2628.38
1845	11400	2621.1	2621.28
1444	11400	2617.3	2617.96
1045	11400	2614.83	2615.51
645	11400	2610.78	2611.4
270	11400	2605.68	2606.57
0	11400	2603.79	2604.74
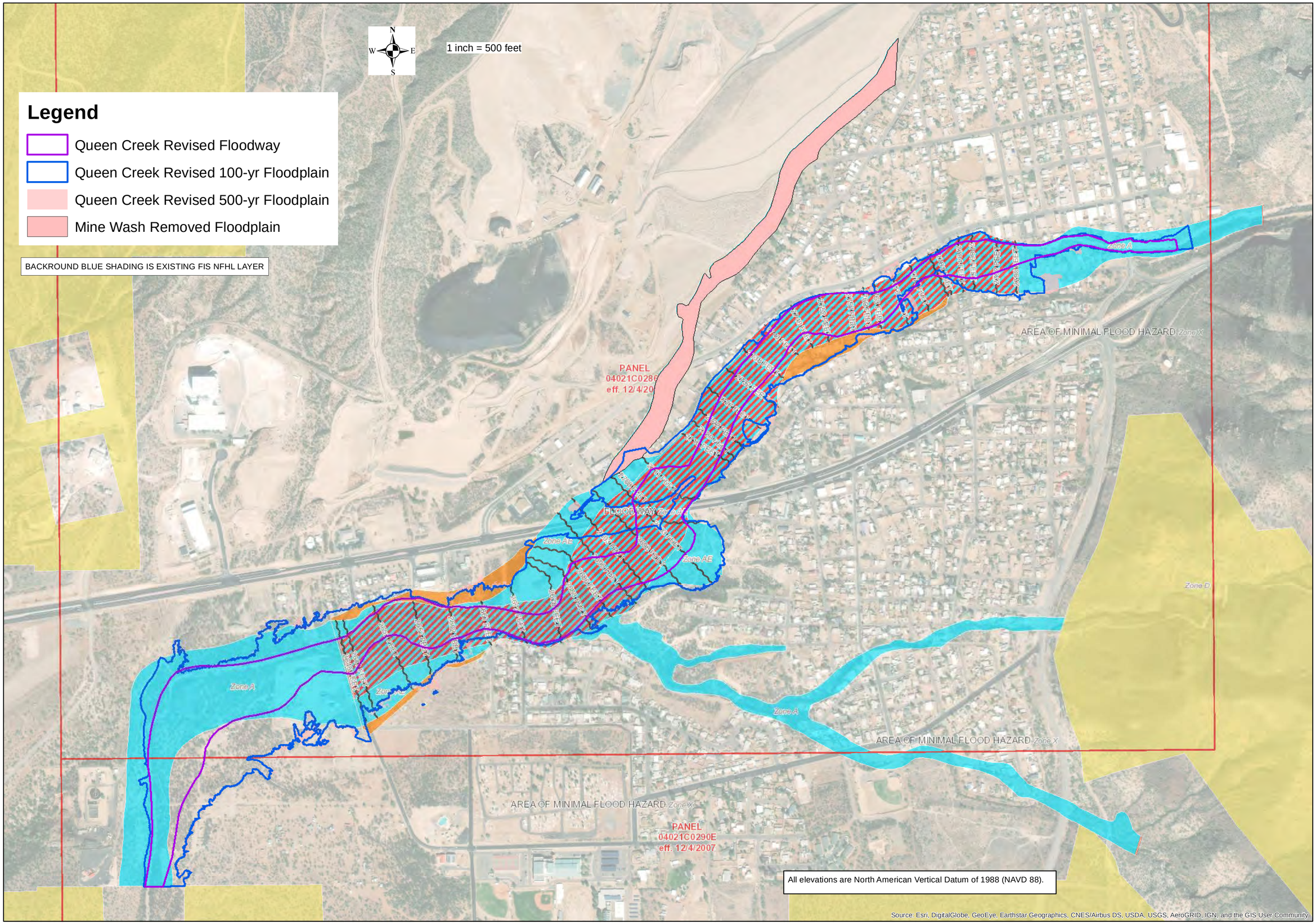
Queen Creek & Mine Wash LOMR Annotated FIRM - Superior, AZ